CronaTech

Motors & Digital Drives

HDT

DGFOX EVO

Ultra-compact digital drive for AC and DC, rotary, linear and tubular brushless and for permanent magnets continuous current low voltage motors with Hall sensors or incremental/absolute encoder. Operation mode via Ethercat CoE, Profinet RT, Canopen®, ModbusRTU and I/O.

PROFINET®

EtherCAT®

Modbus

CiA CANopen®

INSTALLATION AND USER GUIDE

Manual or DGFox60 EVO drive changes				
Manual	*Changes Description Manual, Drive and Caliper*	*FW Vers. Drive*	*SW Vers. Caliper*	*HW Vers. Drive*
10/07/2017 Rev: 4.0	• -	• 4.04	• 4.02	0
02/10/2017 Rev: 4.1	• Added parameter for Hall sensor phase shifting. • Added into manual Canopen and Modbus termination resistors as accessories. • Technical data now correct. • Other text fix.	• 4.05	• 4.03 • 4.04	
12/02/2018 Rev: 4.2	• Added a flag to lead speed PID setting compatibility, converting a configuration file from previous drive FW version 3.xx.	• 4.06 • 4.07	• 4.05	
	• Added new positioner function: input-start position mode via digital input. • Added new function for I/O related to input-start position mode, added input 'Halt function for I/O op. mode and 'Homing attained' function to digital output.	• 4.08	• 4.07	
	• Setting current limit to motor up to 1000.0%.	• 4.09	• 4.08	
	• Fault reaction procedure now added for Profinet operation mode. • Added note for connecting analog input as digital input.	• 4.10	• 4.09	
18/06/2018 Rev: 4.3	• Motor feedback position observer function now added. • Operating temperature range starts from - 20°C.	• 4.11	• 4.09 • 4.10	
10/01/2019 Rev: 4.4	• External encoder loop management now added. • Position software limit now added for Canopen operation mode.	• 4.12	• 4.12 • 4.13	
	• Pressure control topology now added with related alarms. • Current offset for motor brake management now added.	• 4.13	• 4.15 • 4.16	

It's recommended to always verify drive hardware and firmware version in order to connect it to the related and correct Caliper version.

Thanks for choosing this H.D.T. product.

www.hdtlovato.com

Read carefully this manual before using this product.

For continuous improvement, H.D.T. reserves the right to change features and specifications to manual and product without notice for the customer.

Details of images, contained here in, may be different from real product.

Doc.	DGFox60 EVO
Rev. N°	4.4
Date	10/01/2019

Summary

Ch. 1 Safety Informations

Read carefully this manual before using DGFox60 EVO drive.

Take care of this handbook and keep it at hand for later reference.

Please make sure that this handbook is delivered to the final customer and user.

Safety symbols used in this guide are described below:

	**DANGER:** This symbol means the possibility of serious body hazards due to electrical, thermal or mechanical shock.
	**ATTENTION/WARNING:** This symbol means the possibility of damaging drive or other equipment.
	**NOTES:** This symbol suggests auxiliary informations to ensure a correct operation for drive or other equipment.

1.01 Danger 

- Never supply the drive without the cover and never remove the cover while supply is on.
- Do not manipulate the drive with wet hands. Failure to observe this could lead to electrical shocks.
- Keep a safety distance from the motor and the machine when the power is on and never touch the rotary parts of the motor when it is in function.
- When reset the alarms make sure that the signal of running is disabled in order to avoid unexpected start of the motor. Fix up a separate emergency stop device. It exists the risk of injury.
- Do not touch the terminals of the drive, the motor or the external braking resistance, while the power is on. Failure to observe this could lead to electrical or thermal shocks.
- Before starting wiring, ensure that all supplies are off and motor is stopped.
- Always turn the device's input off before starting any maintenance. Failure to observe this could lead to fires or electrical shocks.
- Disconnect all supplies before performing drive maintenance.
- Always wait at least 2 minutes after turning off the input power before starting inspections. Make sure that LEDs have been erased and that the voltage between terminals DC+ and DC- is less than 15V. Failure to observe this could lead to electrical shock.
- The maintenance, the inspection and part replacement must be done by a designated person. Remove all the metal accessories like watches, bracelets etc before beginning the job. Failure to observe this could lead to electrical shocks and injuries.
- Always turn the power off before inspecting the motor or machine. A potential is applied on the motor terminal even when the motor is stopped. Failure to observe this could lead to electrical shock.
- Ensure that supply voltage range mathes with drive features.

1.02 Attention

- Earth cable must be wired according to safety standards of the Country where drive is installed.
- Installation must be done by a designated person.
- Always fix the drive before executing the wiring.
- Install a protection circuit (fuses or magnetic contactor) on drive supply.
- Do not connect an esternal supply on terminals U, V, W.
- Ensure that the drive voltage correspond to the voltage of the supply.
- Fix terminal screws with a correct fixing torque.
- Connect correctly the output side (U,V,W). Failure to do so could cause the motor to rotate in reverse and the machine to be damage.
- If drive power supply is not connected, not connect motor cable if motor is rotating. It exists the danger to damage the machine.
- Not obstruct the entry and the escape of the air and not introduce stranger object. Fire danger exists.
- Ensure the functionality of the motor as single unit before connecting it mechanically to the machine and verify that the max speed of the motor are accepted from the machine. It exists the danger to hurt and to damage the machine.
- Never modify the drive.
- Clean the drive with a vacuum cleaner. Do not use organic solvents. Failure to observe this could lead to burns or damage.
- For your safety, it is very important that any software update or service have to be done by our company.
- When you have to throw away the drive, please dispose of this product as industrial waste, so respect standards enforced by Country laws.

1.03 Notes

- Qualified electrical staff must execute installation and maintenance.
- Earth cable must be wired according to safety standards of the Country where drive is installed.
- The machine operator must receive an adapt preparation.
- The drive may be source of radio-frequency noise if unprovided of the adequate mains filter.
- Observe the drive specifiations and the warnings contained in this manual.
- Always provide an adequate ventilation and keep clean the drive.
- Avoid water or other liquid penetration inside the drive.
- Connect adequate cable to the imput/output terminals.
- The product is not suitable in public mains feeding voltage to habitation. The drive may be source of radio-frequency noise.

1.04 Directives, marks and standards

Drive DGFox60 EVO complies standards below:

Standard/Mark	Description
CEI EN 60204-1	Low voltage safety directive, 2006/95/CE.
CEI EN 61800-3	Product rule reffered to EMC 2004/108/CE directive.
CEI EN 60529	IP20 protection level.
CE	CE marking.

Ch. 2 Introduction

2.01 Description

DGFox60 EVO digital servodrives replace the well known DGFox60 series. The evolution version incorporates a last generation microcontroller that provides a doubled calculation performance, a quadruplicated analog to digital converter accuracy, resulting in an evolution for motor control and software application.

According to drive selected configuration, functionality control takes place via the most advanced fieldbus comunication protocols, including ETHERCAT CoE, PROFINET RT, Canopen® and Modbus RTU, as well as the Input/Output operating mode (always available in each drive configuration).

It allows control for AC and DC Brushless motors type, including rotary, linear and tubular, and permanent magnets continuous current motors equipped with HALL sensors, incremental encoder with or without HALL sensors and absolute encoder on SSI serial protocol, for position and speed feedback. A main DC power supply is requested for power stage also from external battery pack and a second DC backup logic supply is requested for turning on the drive when main DC power supply is absent.

DC power supply, 60V rated, feeds a Mosfet power stage that is able to provide a load current twice the amount of nominal current, for a limited time; second DC logic supply, 24V rated, provides all auxiliary voltages for electronic circuit, included encoder and external serial ports.

DGFox60 EVO can be set up with property software, Caliper, (compatible with Microsoft Windows® operative systems), that allows to enter all calibration settings, parameters saving and alarm management and, thanks to USB 2.0 comunication, to perform debug with realtime scope up to 100µs on 4 simultaneous channels.

Head-on LEDs allow to check drive state and to verify alarms/warnings, leading to a fast failure diagnostic.

2.02 Delivery ispection

For delivery ispection and storage:

1. Remove drive from the packaging and check details on the label that confirm the drive correspond to the one ordered; please take note about Hardware version, because some feature are depending on. The label in on the heatsink side.
2. Make sure that the product has not been damaged.
3. If the drive is not to be used for a while after purchasing, it has to be stored, possibly with its shipment covering, in a place with no humidity, absence of vibrations and far from water sprays.
4. Always inspect the inverter before using after a long period storage.

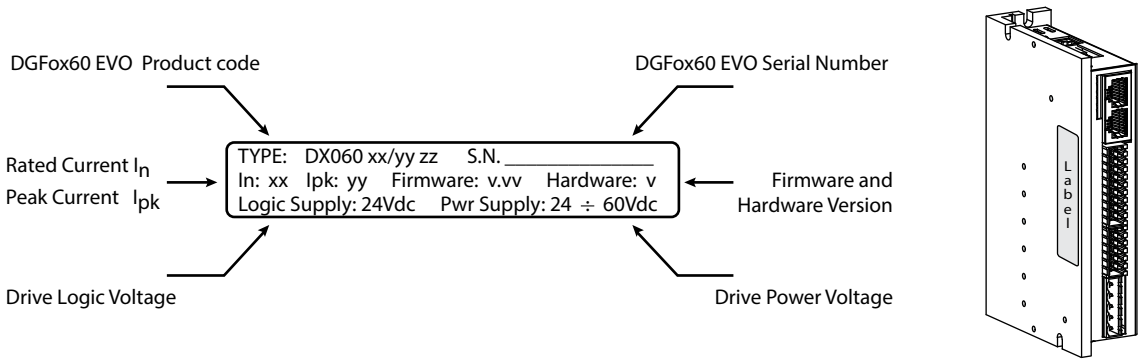

It's recommended to always verify drive firmware version in order to connect it to the related and correct Caliper version.

2.03 Drive sizes and option configuration

The power available is covered by following models:

MODEL	Output Current		Input Voltage		Maximum Output Power	
	Rated	Maximum	Minimum	Maximum	AC & DC brushless	DC brushed
	A_{rms}		V_{DC}		W	
DGFox60 EVO 2.5/5	2.5	5	20	80	175	125
DGFox60 EVO 5/10	5	10	20	80	350	250
DGFox60 EVO 8/16	8	16	20	80	550	400
DGFox60 EVO 10/20	10	20	20	80	700	500
DGFox60 EVO 13/26	13	26	20	80	900	650

Configurations available are covered by following options:

MODEL		Configuration description
DGFox60 EVO xx/yy ST	STANDARD	Analog or frequency reference and I/O hardware signals.
DGFox60 EVO xx/yy CM	CAN MODBUS	Fieldbus Canopen or Modbus operation mode (analog or frequency reference and I/O hardware signals always included).
DGFox60 EVO xx/yy EC	ETHERCAT	Fieldbus Ethercat Coe operation mode (analog or frequency reference and I/O hardware signals always included).
DGFox60 EVO xx/yy PN	PROFINET	Fieldbus Profinet RT operation mode (analog or frequency reference and I/O hardware signals always included).

Order code:

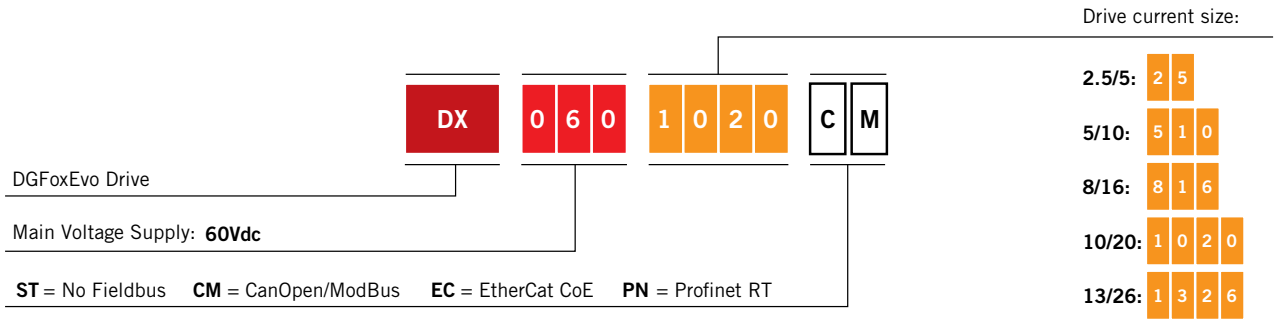

EXAMPLE:	DX 060 25 CM	DGFOX EVO 60V - 2.5A./5A.- With CanOpen/Modbus option

2.04 Technical data

ELECTRICAL FEATURES	
Main Power and logic supply	**Continuous voltage: 60V_{DC} rated (-66% / +33%)** **Efficiency: ≥ 97%**
Maximum output current	**I_{PEAK} up to 2 second**
Output frequency	**Up to 1000Hz**
Backup Logic supply	**Continuous voltage: 24V_{DC} ± 20%** **Maximum current: 250mA_{RMS}** (when main supply is not present)
Digital output	**N°2 optoinsulated NPN/PNP: OUT0 and OUT1 programmable** • V_{DC} < 30V and $I_{MAX\ LOAD}$ < 50mA for each output
Digital input	**N°6 not insulated PNP 24V_{DC} ± 20%: : IN0 to IN5 programmable** • Impedence > 15kΩ **N°2 not insulated PNP 10-30V: IN6 and IN7 programmable** • Impedence = 44kΩ • derived from analog input converted to digital input
Main analog input	**N°1 differential ±10V: IN6** • Impedence = 44kΩ (ADC 12Bit) • only available if not used as digital input
Auxiliary analog input	**N°1 single ended 0/+10V: IN7** • Impedence = 44kΩ (ADC 12Bit) • only available if not used as digital input
Frequency input reference	**N°1 main optoinsulated input** (2 x differential or single ended channels) • Line Driver 5V: impedence = 200Ω / up to 500kHz for each channel • NPN/PNP 24V: external pull-up resistor / up to 200kHz for each channel
Main Feedback	**Incremental Encoder with/without HALL sensors:** • *Supply*: V_{DC} = 5V / $I_{MAX\ LOAD}$ < 200mA • *HALL sensors*: single ended 0/+5V (120° sequence management) • *Incremental Encoder* (2 x differential or single ended channels) 1. Line Driver 5V: impedence 1kΩ / up to 2.5MHz for each channel 2. Push-Pull 5V: impedence 1kΩ / up to 400kHz for each channel 3. Open Collector 5V: up to 200kHz for each channel (with internal pull up resistor with value equal to1kΩ): **SSI Absolute Encoder:** • *Supply*: V_{DC} = 5V / $I_{MAX\ LOAD}$< 300mA • *DATA* Line Driver 5V: impedence = 220Ω • *CLOCK* Line Driver 5V: $I_{MAX\ LOAD}$ = 20mA • *SSI binary code single and multiturn*: up to 16bit in single-turn and 15bit in multi-turn, including MSB used for sign management
Encoder repetition output	**Main feedback incremental encoder repetition output** • ABZ Line Driver 5V: $I_{MAX\ LOAD}$ < 20mA for each channel • GND and SHIELD connection
USB 2.0	**USB 2.0 port for drive setting via Caliper software** • USB micro-AB port

TECHNICAL FEATURES	
Operating conditions and storage	Operating temperature*: 0°C / +45°C Storage and transport : -20°C / +70°C Altitude: up to 1000m. For upper altitude, degrade drive by 1% each additional 100m. Protection level: IP20. Weight: ~ 400g.
Protections	Short-circuit of motore and between phase and earth DC power supply overvoltage e undervoltage Overcurrent limitation Drive heatsink overtemperature Motor thermal image Feedback damage Alarms via 3 LEDs 1. LED L0 (green): drive OK and alarms encoding 2. LED L1 (yellow): drive state and alarms encoding 3. LED L2 (red): alarms detected 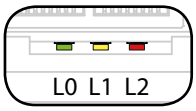
Control	Fully digital ring regulation control: • Synchronous AC brushless rotary and linear motor: FOC control, SVM modulation, with feedback or sensorless. • Synchronous AC brushless rotary and linear motor: Trapezoidal modulation only with HALL sensors. • Permanent magnets continuous current rotary motor with feedback. Speed, torque, position and pressure reference: • via analog input or frequency input (pulse train). • single parameter or parameter table selectable via digital input o fieldbus. • with torque limit management. • with factors management useful to make easier convertions. • with change target on the fly. • with trapezoidal ramps or S ramps distinct for rotation direction. Position feedback: • motor sensor (incremental or absolute encoder). • external incremental encoder. Available filters: • Observer on motor feedback. • Notch filter on current reference. • Iq filter on quadrature current to motor. • PB filter in analog and digital input. Motor autophasing procedure available for all feedback. Digital I/O fully programmable. Cogging motor compensation available for brushless motors. Motor mechanical brake management. Drive setting via Caliper software.

Operating modes	**INPUT / OUTPUT** (always available for all drive configuration) 1. Speed/Torque Control or Speed with Torque limit. 2. Electronic Gearbox (CHA-B, CW-CCW, Pulse-Direction). 3. Position: single, analog 12 bit, up to 64 target table via cyclic/acyclic target, via digital input selection, via input start selection. 4. Electronic Cam (CHA-B, Pulse-Direction, 576 points per cam, up to 8 cams). 5. Pressure control.
	CANOPEN® and **MODBUS RTU** (available only for CM options) » **Canopen® CiA301 e CiA402** up to 1Mbps and Sync up to 1ms 1. Electronic Gear 2. Position Mode 3. Velocity Mode 4. Profile Velocity Mode 5. Profile Torque Mode 6. Homing Mode 7. Interpolated Position Mode 8. Cyclic Sync Position Mode 9. Cyclic Sync Velocity Mode 10. Cyclic Sync Torque Mode 11. Touch Probe 12. Pressure control » **Modbus RTU** up to 57.6Kbps 1. Speed/Torque Control and Speed with Torque limit control. 2. Electronic Gearbox (CHA-B, CW-CCW, Pulse-Direction). 3. Position: single, analog 12 bit, up to 64 target table via cyclic/acyclic target, via digital input selection, via input start selection. 4. Electronic Cam (576 points per cam, up to 8 cams). 5. Pressure control.
	ETHERCAT CoE (available only for EC options) » **Canopen® CiA301 and CiA402 over Ethercat** Free Run, Sync Manager, DC up to 500µs: 1. Electronic Gear 2. Position Mode 3. Velocity Mode 4. Profile Velocity Mode 5. Profile Torque Mode 6. Homing Mode 7. Interpolated Position Mode 8. Cyclic Sync Position Mode 9. Cyclic Sync Velocity Mode 10. Cyclic Sync Torque Mode 11. Touch Probe 12. Pressure control
	PROFINET RT Realtime CC-A and CC-B (available only for PN options) » **PROFIDRIVE** 1. Speed control (AC1) 2. Position in Program Mode (AC3) 3. Position (manual AC3) 4. Pressure control

*For DGFox60 EVO 1326 drive, please ensure that, during operation, ambient temperature remains within 40°C.

2.05 Drive and motor selection

DGFox60 EVO power stage can be supplied with DC Voltage from 20V to 80V; drive can feed voltage to AC sinusoidal brushless motors, DC trapezoidal brushless motor and DC brushed motors (continuous current motors).

2.05.1 AC sinusoidal brushless motor

Assuming drive to be supplied with 60V continuous voltage, maximum mean square voltage value to AC brushless motor (sinusoidal back EMF), is:

$$U_{MAX_{AC}} = \frac{60V_{DC} - 3V_{DC}}{\sqrt{2}} = 40V_{AC}$$

So motor rated voltage must be a bit lower in order to ensure rated speed reaching. For example:

$$U_{NOM\_motore} = 36V_{AC}$$

Drive output power (Watt) is in function of provided rated current (Amps):

$$P_{OUT_{AC}} = U_{MAX_{AC}} \cdot I_{NOM} \cdot \sqrt{3} \quad [W]$$

For the drive selection, according to AC brushless motor (rotary, linear or tubular type), refer to table below:

Power Supply DC	AC BRUSHLESS MOTOR DATA		DGFox60 EVO (sizes)				
			2.5/5	5/10	8/16	10/20	13/26
24V	Max Voltage	U_{MAX}	***14V$_{AC}$***				
	Rated Current	I_{NOM}	≤ 2.5A	≤ 5A	≤ 8A	≤ 10A	≤ 13A
	Max Power	P_{MAX}	*≤ 55W*	*≤ 110W*	*≤ 180W*	*≤ 210W*	*≤ 285W*
	Suitble H.D.T. brushless motors		On request. For information please contact our technical department.				
48V	Max Voltage	U_{MAX}	***30V$_{AC}$***				
	Rated Current	I_{NOM}	≤ 2.5A	≤ 5A	≤ 8A	≤ 10A	≤ 13A
	Max Power	P_{MAX}	*≤ 105W*	*≤ 210W*	*≤ 335W*	*≤ 420W*	*≤ 540W*
	Suitble H.D.T. brushless motors		MS04M		On request. For information please contact our technical department.		
60V	Max Voltage	U_{MAX}	***40V$_{AC}$***				
	Rated Current	I_{NOM}	≤ 2.5A	≤ 5A	≤ 8A	≤ 10A	≤ 13A
	Max Power	P_{MAX}	*≤ 140W*	*≤ 280W*	*≤ 440W*	*≤ 560W*	*≤ 720W*
	Suitble H.D.T. brushless motors		MS04M B05S	MS04M B05S B05M B05L B07S	MS06M B05M B05L B07S B07M	MS06M B05L B07S B07M	MS06M B07S B07M B07L

For information about H.D.T. AC brushless motors, refer to technical manuals downloaded from internet corporate site:

www.hdtlovato.com

2.05.2 DC trapezoidal brushless motor

Assuming drive to be supplied with 60V continuous voltage, maximum mean square voltage value to DC brushless motor (trapezoidal back EMF), is:

$$U_{MAX_{DC}} = 60V_{DC} - 3V_{DC} = 57V_{DC}$$

So motor rated voltage must be a bit lower in order to ensure rated speed reaching. For example:

$$U_{NOM\_motore} = 52V_{AC}$$

Drive output power (Watt) is in function of provide rated current (Amps):

$$P_{OUT_{DC}} = U_{MAX_{DC}} \cdot I_{NOM} \cdot \frac{\sqrt{3}}{\sqrt{2}} \; [W]$$

For the drive selection, according to DC brushless motor (rotary, linear or tubular type), refer to table below:

Power Supply DC	DC BRUSHLESS MOTOR DATA		DGFox60 EVO (sizes)				
			2.5/5	5/10	8/16	10/20	13/26
24V	Max Voltage	U_{MAX}	***21V$_{AC}$***				
	Rated Current	I_{NOM}	≤ 3A	≤ 6A	≤ 10A	≤ 12A	≤ 15A
	Max Power	P_{MAX}	*≤ 55W*	*≤ 110W*	*≤ 180W*	*≤ 210W*	*≤ 285W*
	Suitble H.D.T. brushless motors		On request. For information please contact our technical department.				
48V	Max Voltage	U_{MAX}	***45V$_{AC}$***				
	Rated Current	I_{NOM}	≤ 3A	≤ 6A	≤ 10A	≤ 12A	≤ 15A
	Max Power	P_{MAX}	*≤ 105W*	*≤ 210W*	*≤ 335W*	*≤ 420W*	*≤ 540W*
	Suitble H.D.T. brushless motors		On request. For information please contact our technical department.				
60V	Max Voltage	U_{MAX}	***57V$_{AC}$***				
	Rated Current	I_{NOM}	≤ 3A	≤ 6A	≤ 10A	≤ 12A	≤ 15A
	Max Power	P_{MAX}	*≤ 140W*	*≤ 280W*	*≤ 440W*	*≤ 560W*	*≤ 720W*
	Suitble H.D.T. brushless motors*		B05S	B05S B05M B05L B07S	B05M B05L B07S B07M	B05L B07S B07M	B07S B07M B07L

Since drive get both sinusoidal and trapezoidal control, it's possible to provide trapezoidal control for AC brushless motor (see *"6.14 HALL sensors feedback control" pag. 76*).

2.05.3 DC brushed permanent magnets motor

Assuming drive to be supplied with 60V continuous voltage, maximum mean square voltage value to DC brushed motor (linear back EMF), is:

$$U_{MAX_{DC}} = 60V_{DC} - 3V_{DC} = 57V_{DC}$$

So motor rated voltage must be a bit lower in order to ensure rated speed reaching. For example:

$$U_{NOM\_motore} = 50V_{DC}$$

Drive output power (Watt) is in function of provide rated current (Amps):

$$P_{OUT_{DC}} = U_{MAX_{DC}} \cdot I_{NOM} \; [W]$$

For the drive selection, according to DC brushed motor (permanent magnets), refer to table below:

Power Supply DC	DATI MOTORE C.C.		DGFox60 EVO (taglie)				
			2.5/5	5/10	8/16	10/20	13/26
24V	Max Voltage	U_{MAX}	***18V$_{DC}$***				
	Rated Current	I_{NOM}	≤ 2.5A	≤ 5A	≤ 8A	≤ 10A	≤ 13A
	Max Power	P_{MAX}	*≤ 36W*	*≤ 72W*	*≤ 115W*	*≤ 144W*	*≤ 190W*
	Suitble H.D.T. brushless motors		On request. For information please contact our technical department.				
48V	Max Voltage	U_{MAX}	***40V$_{DC}$***				
	Rated Current	I_{NOM}	≤ 2.5A	≤ 5A	≤ 8A	≤ 10A	≤ 13A
	Max Power	P_{MAX}	*≤ 80W*	*≤ 160W*	*≤ 260W*	*≤ 320W*	*≤ 420W*
	Suitble H.D.T. brushless motors		On request. For information please contact our technical department.				
60V	Max Voltage	U_{MAX}	***50V$_{DC}$***				
	Rated Current	I_{NOM}	≤ 2.5A	≤ 5A	≤ 8A	≤ 10A	≤ 13A
	Max Power	P_{MAX}	*≤ 100W*	*≤ 200W*	*≤ 320W*	*≤ 400W*	*≤ 520W*
	Suitble H.D.T. brushless motors*		On request. For information please contact our technical department.				

Ch. 3 Installation

3.01 Mechanical installation

Please follow the following instruction during the installation:

1. Install the drive in a vertical and perpendicular position regarding the floor.
2. Insure yourself that the environment temperature is comprised between 0 and 45° Celsius*.
3. Avoid the following conditions:
   - Direct exposure to the solar light
   - Assemble in places with presence of powders, soil, particles of iron.
   - Assemble in places with corrosive gas, explosive gas or high grade of humidity.
   - Assemble in proximity of machines that generate vibrations.
   - Assemble in proximity or on inflammable matter (as wood) or not resistant to the heat.
4. Insure yourself that the driver will be assembled in a position that guarantee a correct ventilation, as shown in picture below.
5. For convenience, please set drive Fieldbus Address before installation.

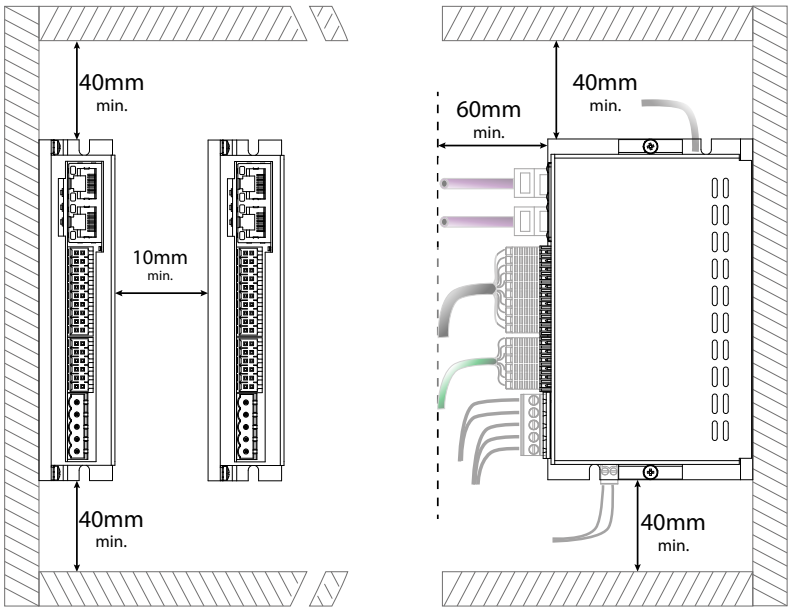

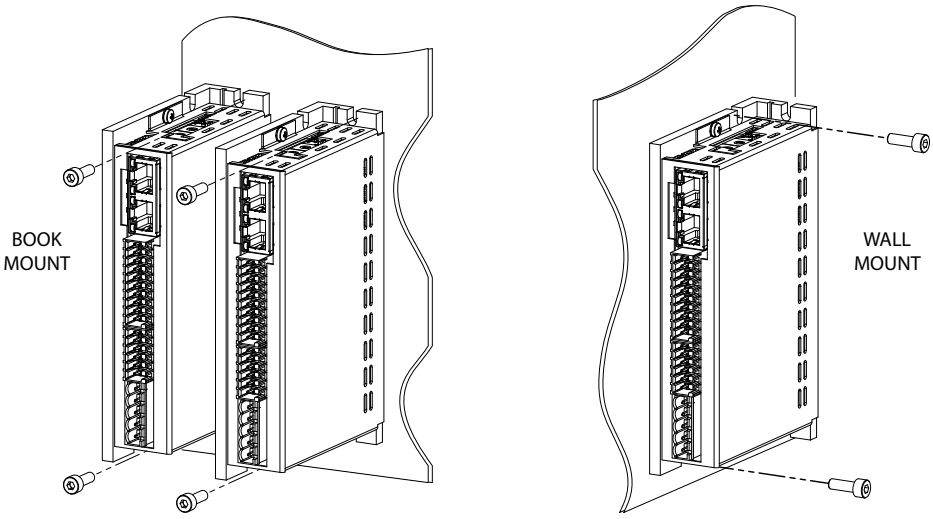

*For DGFox60 EVO 1326 drive, it is recommended that, during operation, the ambient temperature remains within 40°C.

3.02 Dimensions and side views

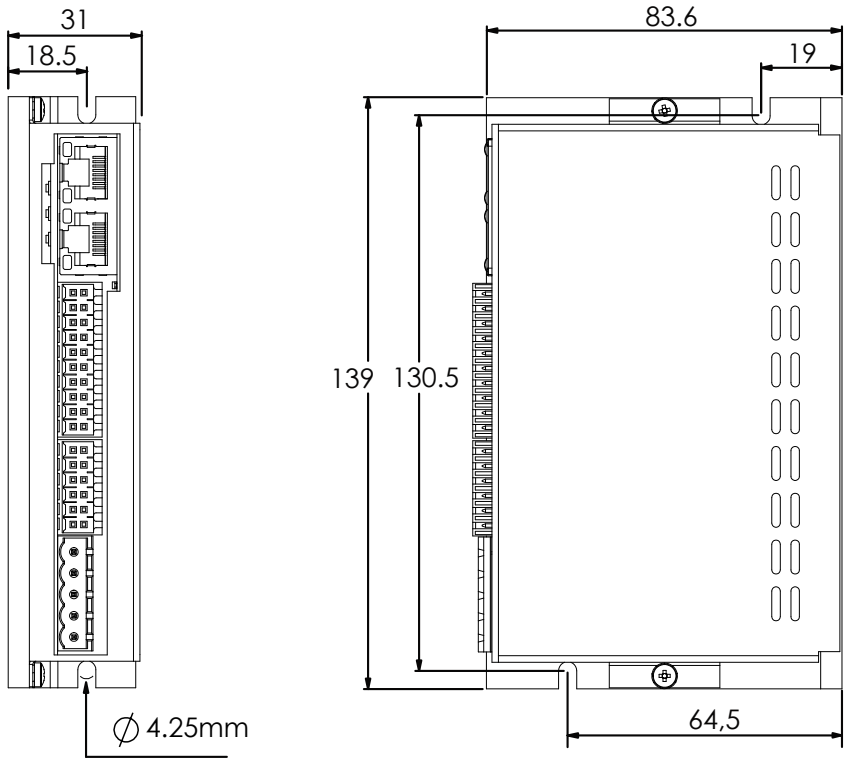

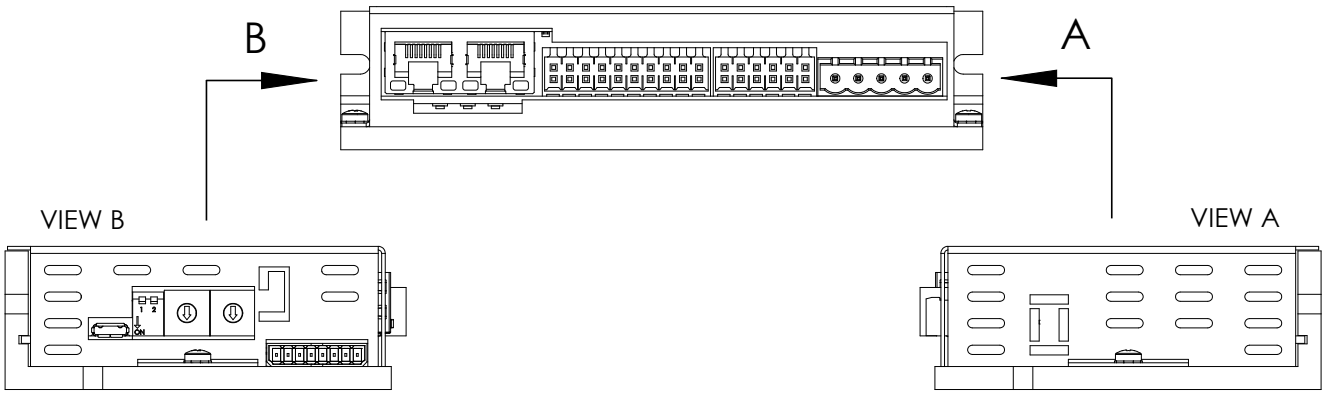

Ch. 4 Supply and quick start

In order to supply the drive power stage, an insulated transformer in needed, NOT an auto-transformer, cause the secondary transformer winding will be connected to Power Earth. A single phase transformer can supply more drives. If the total current supplied to the drive exceeds 8Amps, a tri-phase transformer is needed.

4.01 Standard wiring for quick start

Typical connection diagram, about power/logic supply and signals, is shown below:

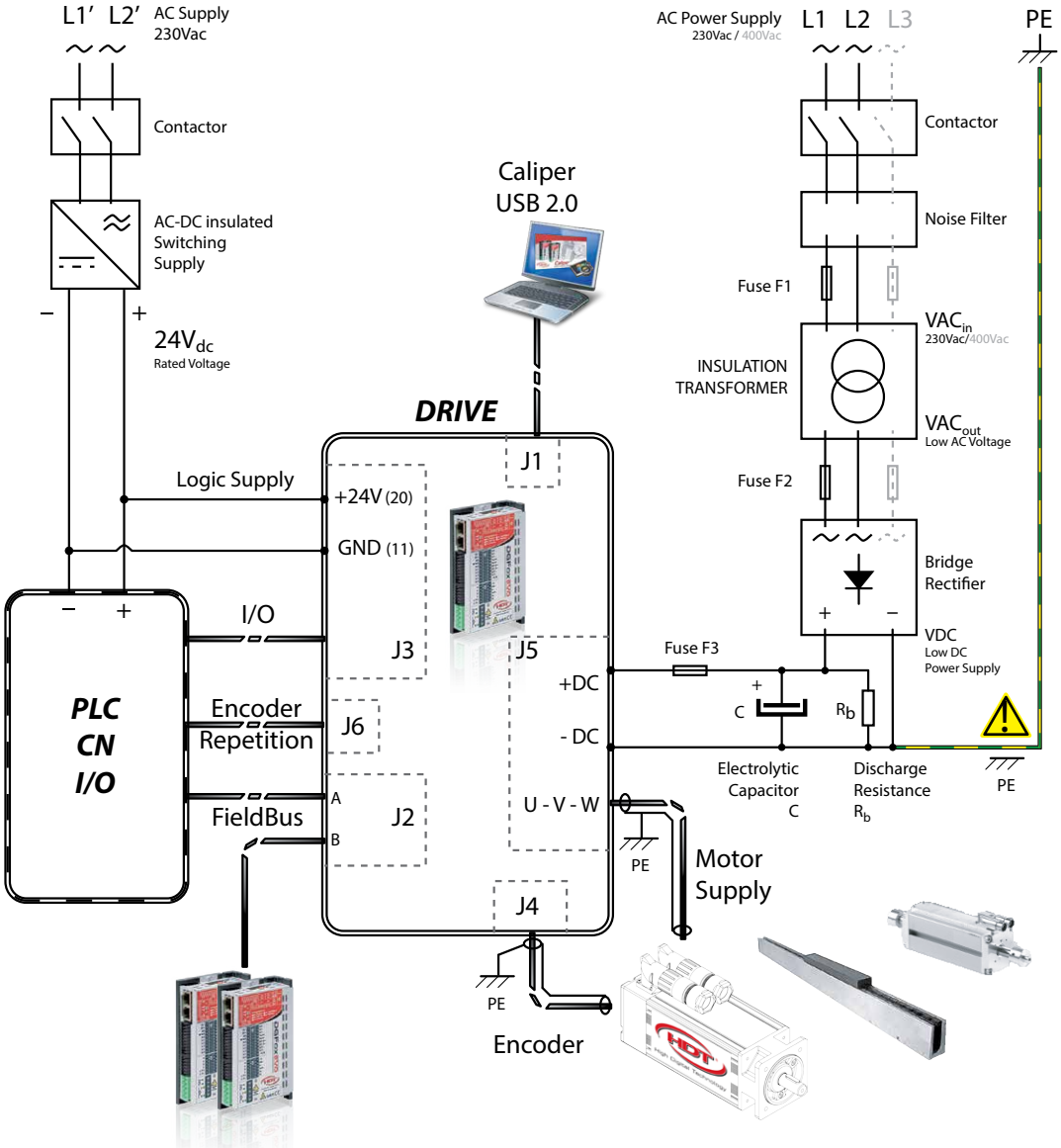

For detailed information about connection between 'external control-drive-motor', please see:

- *"6.14 HALL sensors feedback control" pag. 76*.
- *"6.15 Incremental encoder feedback control" pag. 78*.
- *"6.16 Absolute Encoder feedback control" pag. 80*.
- *"6.17 Sensorless speed control" pag. 82*.
- *"6.18 Position control: electronic gearbox mode" pag. 84*.
- *"6.19 Position control: positioner mode" pag. 86*.
- *"6.20 Position control: electronic cam mode" pag. 88*.
- *"6.21 Pressure control" pag. 90*.

Refer to following pictures to ensure a correct connection providing supply to multiple drives:

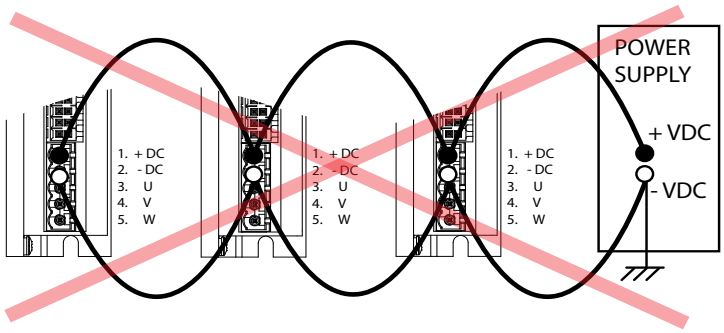

WRONG WIRING

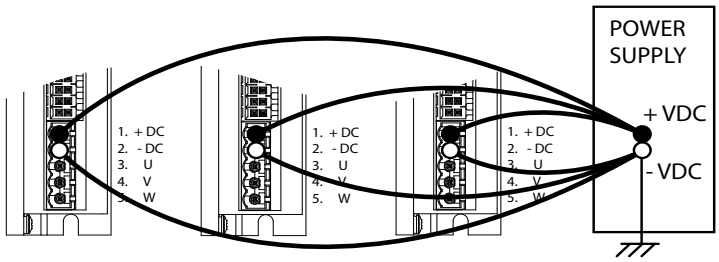

CORRECT WIRING

4.02 Power transformer

The transformer must be designs using following empirical formula, in function of number N of drives connected to the same supply.

Power P_T is given by:

$$P_T = (P_{AZ} \cdot \sqrt{3} + 80) \cdot \frac{\sqrt{3}}{\sqrt{N+2}} \quad [W]$$

with:

$$P_{AZ} = V_{m1} \cdot C_{m1} + V_{m2} \cdot C_{m2} + \dots + V_{mN} \cdot C_{mN} \quad [W]$$

where V_m is motor rated speed in rad/s and C_m is motor rated torque in Nm.

The conversion formula between RPM to rad/s is:

$$V_m = \frac{RPM}{9{,}5} \quad [\frac{rad}{s}]$$

Transformer turns ratio must be designed in order to ensure that, with nominal RMS line voltage value (VAC_{IN}), nominal RMS output voltage value (VAC_{OUT}) is $45V_{AC}$. So, with no load applied, the rectified voltage (VDC) will be:

$$VDC = VAC_{OUT} \cdot \sqrt{2} = 63\text{V}$$

4.03 Capacitor discharge resistance

Resistance Rb value, design to ensure a 10 seconds discharging time, and resistance power dissipation are obtained from formulas below:

$$R_b = \frac{20.000.000}{C[uF]} [\Omega] \qquad P_{Rb} = \frac{V_2^2}{R_b} \quad [W]$$

4.04 Electrolitic capacitor

Capacitor allows voltage rectification and energy recovering during motor deceleration.

Working Voltage (WV) must be at least 100V; total capacitor value is usually design using the empirical formula below:

$$C = \frac{2000 \cdot P_T}{VDC} \; [uF]$$

Coefficient 2000 is a caution factor and can be reduced to 1000 in conditions below:

- motor speed is lower than 1500 RPM, with triphase line supply.
- machine 'moment of inerzia' is lower than motor, with triphase line supply.

If, during motor deceleration, overvoltage protection occurs, with own alarm (see *"Ch. 7 Drive status and diagnostics" pag. 101*), please consider these two possible solution:

- increase electrolitic capacitor value.
- decrease deceleration ramp.

4.05 Bridge rectifier

Please use a full wave bridge rectifier in single phase line supply or a traditional triphase bridge rectifier in triphase line supply. In triphase supply, two full wave bridge rectifiers can be used as shown below:

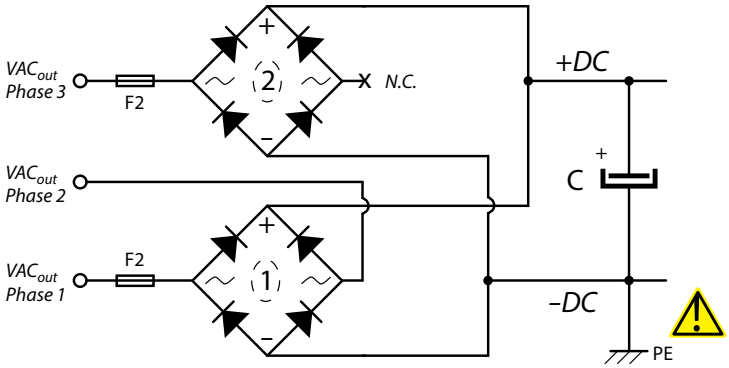

Reverse breackdown voltage must be at least 400V. Minimum current I_f provided by rectifier must be:

$$I_F = In_1 + In_2 + In_3 + ...$$

where In_1, In_2, In_3, ... are multiple drives rated current.

Rectifier installation have to provide a correct dissipation condition for the device: for example, rectifier can be screwed on the bottom of electric cabinet where drives are installed too.

4.06 Fuses

F1 and F2 must be delay fuses. In order to choose a correct value, please use formulas below:

$$F_1 = \frac{1{,}3 \cdot P_T}{VAC_{in}} \; [A] \qquad F_2 = \frac{1{,}6 \cdot P_T}{VAC_{out}} \; [A]$$

F3 must be at least a **16Amps** delay fuse.

For information about additional optional, see *"Ch. 8 Order code and accessories" pag. 107*.

Ch. 5 Wiring and connections

5.01 General description

Position and name of connectors are explained below and are visible also on the head-on label:

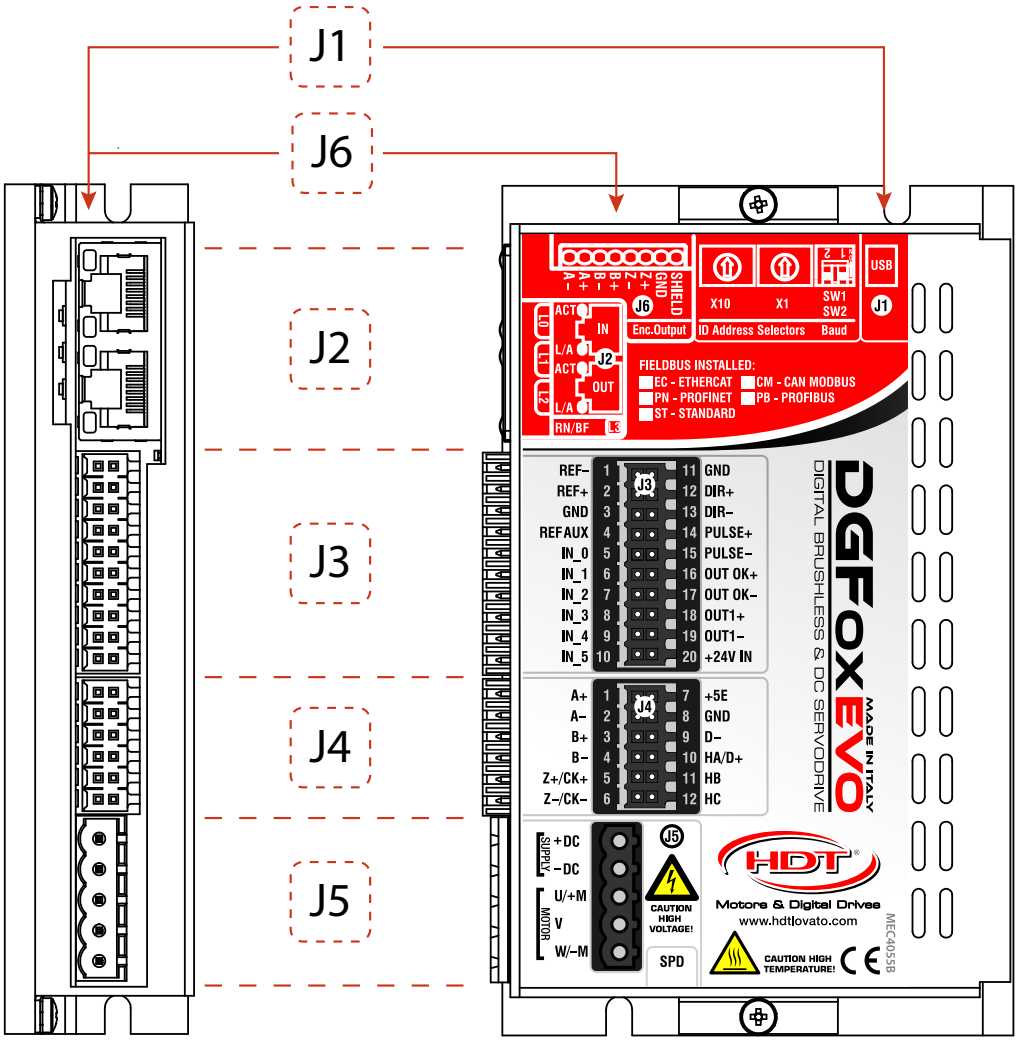

Connector	Description
J1	USB Micro AB port for drive setting via Caliper on PC
J2	Fieldbus comunicazion connector (blanck in ST - Standard configuration)
J3	Analog and digital I/O and $+24V_{DC}$ logic supply
J4	Feedback from motor connector: encoder, HALL sensors
J5	DC power supply and motor supply connector (U,V,W)
J6	Main feedback incremental encoder repetition output

NB: picture shows EC or PN configuration

5.02 J1 connector: drive setting

Before connecting a desktop PC to the drive, ensure that PC Power Earth is the same of the drive, otherwise, please, use an insulated laptop PC.

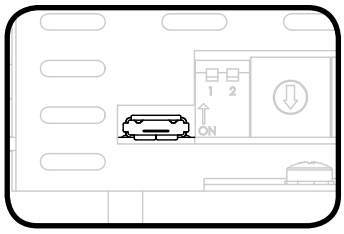

Connector TYPE	**Micro USB tipo AB**
Utility	USB 2.0 comunication at 12Mbps. Function set, tuning and diagnostic procedures via Caliper software. Firmware upgrade.
Cable	**Standard USB type A to micro-B shielded cable.**

5.02.1 Using USB 2.0 HUBs

I's allowed to use USB 2.0 HUBs in cascaded connection to visualize more axises with same PC. Tipical connection available between PC and DGFox60 EVO drive, using USB HUBs, is shown below:

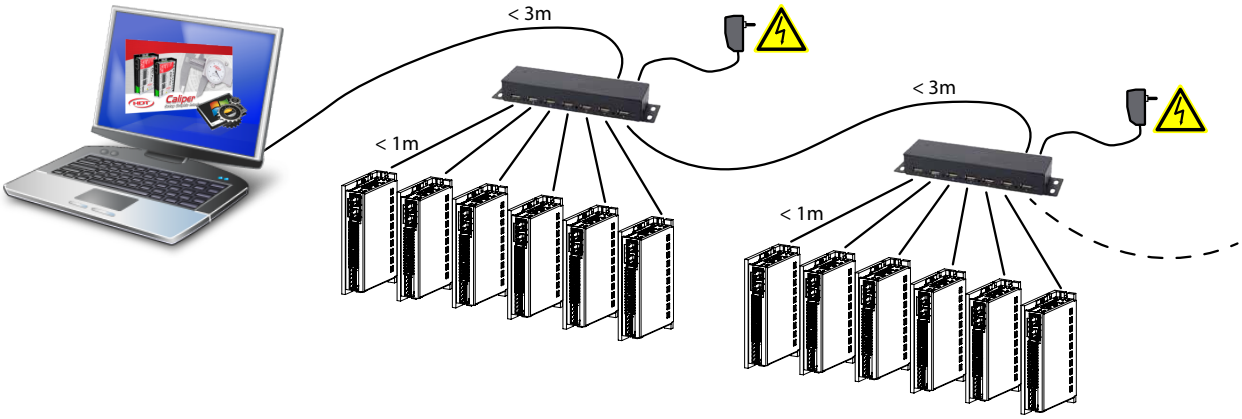

NOTES:

- It's strongly recommended to use USB shielded cables, whose lenght is less than 3m for single drive or less than 1m for each drive connected to an USB HUB.
- Keep USB comunication cables far from power and feedback cables.
- It's recommended to use shielded HUB with active supply if long distances are required.
- Maximum number of installable USB devices is 128, but real displayable number is related to PC hardware and used operating system.
- It's possible to connect all other H.D.T. drive families, that support USB, to the same HUB.
- For information about cable, see *"Ch. 8 Order code and accessories" pag. 107*.

5.03 J2 connector: EC and PN option configuration

» EC configuration: Ethercat

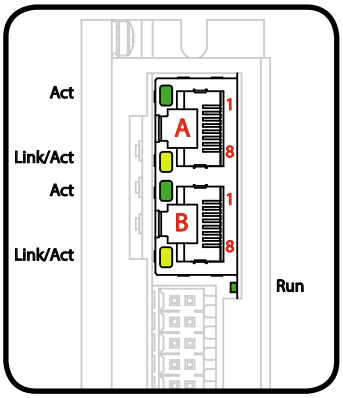

Connector TYPE	**Double RJ45: IN (A) and OUT (B) port with Link/Act and fieldbus status led.**
Utility	Fieldbus comunication protocol: • **Ethercat CoE**, (Canopen® CIA 402 over Ethercat) with EC option.
N° pins and LEDs	**8 x 2** (Ethernet standard according to EN50173-1:2011). **4 x LED** link/activity and **1 x green LED** for fieldbus status.

» PN configuration: Profinet

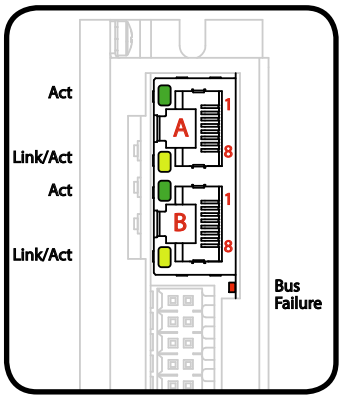

Connector TYPE	**Double RJ45: IN (A) and OUT (B) port with Link/Act and fieldbus status led.**
Utility	Fieldbus comunication protocol: • **Profinet RT**, (Profidrive CA e CB) with PN option.
N° pins and LEDs	**8 x 2** (Ethernet standard according to EN50173-1:2011). **4 x LED** link/activity and **1 x red LED** for fieldbus status.

PIN	J2 connector description	
A1-B1	TD +	Transmit Data +
A2-B2	TD –	Transmit Data –
A3-B3	RD +	Receive Data +
A4-B4	-	
A5-B5	-	
A6-B6	RD –	Receive Data –
A7-B7	-	
A8-B8	-	

NOTES:

- Monitored fieldbus: for information, see *"7.03 Diagnostics" pag. 103*.
- Keep comunication cables far from power and feedback cables.
- It may be necessary to use a switch repeter for bus lenght grater than 1000m.
- Use shielded patch cable (pin-to-pin) FTP 568 (B) Cat. 5 or better.
- As to connect multiple drives, RJ45 needs a cascade connection, so the wiring between the drives themselves must be pin-to-pin.
- For information about cable, see *"Ch. 8 Order code and accessories" pag. 107*.

5.04 J2 connector: CM option configuration

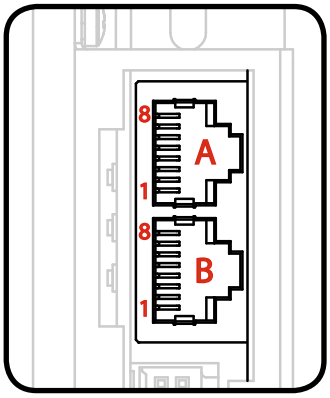

Connector TYPE	**Double RJ45: IN (A) and OUT (B) parallel connected ports**
Utility	Fieldbus comunication protocols: • Canopen® CIA301e CIA 402 • Modbus RTU
N° pins	**8 x 2: A1-A8 and B1-B8** (CIA303 standard + Modbus RTU standard)

PIN	J2 connector description	
A1-B1	CAN H	High Canopen® data
A2-B2	CAN L	Low Canopen® data
A3-B3	GND	Common Ground for Canopen®
A4-B4	MODBUS +	+ data for RS485 Modbus RTU
A5-B5	MODBUS –	– data for RS485 Modbus RTU
A6-B6	-	
A7-B7	Shortcircuit	For possible external signal or supply
A8-B8	GND	Common Ground for Modbus RTU

5.04.1 Cable for J2

In order to ensure a correct operation for Canopen® Fieldbus comunication, please follow instruction below:

- connect external 120Ω termination resistor
- the table below shows Bus total lenght related to Baudrate:

Baudrate	Bus Lenght
1 Mbit/s	< 20m
500 kbit/s	< 100m
250 kbit/s	< 250m
125 kbit/s	< 500m
50 kbit/s	< 1000m
20 kbit/s	< 2500m
10 kbit/s	< 5000m

Wiring connections and pins numbering for J2 connector is shown below:

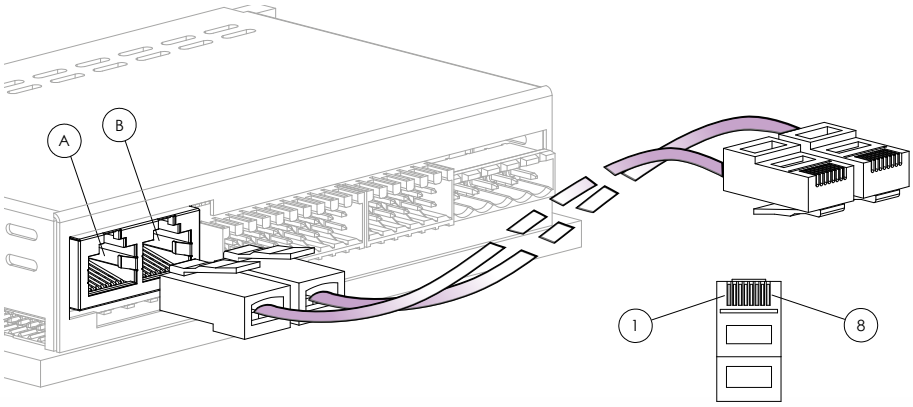

NOTES:

- Monitored fieldbus: for information, see *"7.03 Diagnostics" pag. 103*.
- Keep comunication cables far from supply and feedback cables.
- It may be necessary to use a repeter or signal amplifier for bus lenght grater than 1000m.
- Use shielded patch cable (pin-to-pin) FTP 568 (B) Cat. 5 or better.
- As to connect multiple drives, RJ45 needs a cascade connection, so the wiring between the drives themselves must be pin-to-pin.
- For information about hardware node ID address and baudrate, see *"6.06 Rotary switches and dip switch" pag. 60*.
- For information about cable, see *"Ch. 8 Order code and accessories" pag. 107*.

5.05 J3 connector: I/O and logic supply

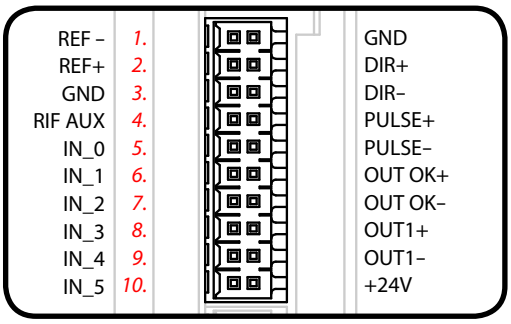

Connector TYPE	**Double row, pitch 3.5mm**
Utility	Analog and digital I/O. +24V backup logic supply.
N° pins	**20**

PIN	J3 connector description	
1	REF –	± 10V 12bit ADC differential analog input for main reference. Available also for digital input IN_6 (single ended PNP). For information, see *"6.09 Drive References" pag. 66*.
2	REF +	
3	GND	0/+10V 12bit ADC single-ended analog input for auxiliary reference. Available also for PNP digital input IN_7. *"6.09.2 Auxiliary Reference" pag. 67*.
4	RIF AUX	
5	IN_0	Programmable digital input function defined by chosen operating mode. For information, see *"6.08.1 Digital I/O functions" pag. 64*.
6	IN_1	
7	IN_2	
8	IN_3	
9	IN_4	
10	IN_5	
11	GND	Ground reference 0V for $+24V_{DC}$ supply and digital input signals IN_0-5.
12	DIR +	Frequency main reference input: Line Driver, NPN and PNP optoinsulated digital input for DIRECTION / CH A external encoder / CCW data.
13	DIR –	
14	PULSE +	Line Driver NPN and PNT optoinsulated digital input for PULSE / CH B external encoder / CW data.
15	PULSE –	
16	OUT OK +	Optoinsulated programmable NPN/PNP digital output. Normally used for "Drive OK" function, it's high active when no alarms occured. It's low disabled when an error occures and drive shuts down in FAULT condition. For information, see *"6.08.1 Digital I/O functions" pag. 64*.
17	OUT OK –	
18	OUT1 +	Optoinsulated programmable NPN/PNP digital output. For information, see *"6.08.1 Digital I/O functions" pag. 64*.
19	OUT1 –	
20	+24V	$+24V_{DC}$ backup logic supply when main supply is disconnected. See also *"Ch. 4 Supply and quick start" pag. 19*.

NOTES:

- GND of pin 3 is connected to pin 11, inside the drive.
- Single ended connection for main reference is to connect *-Ref* (pin 1) to *GND* ground (pin 3) and to connect signal to pin 2; this connection type is usefull if the external controller device has not differential analog output, but ±10V single ended only, and if this analog isput is used as digital input (single ended PNP).
- Keep I/O cables far from supply and feedback cables.
- **Use at least 0.5mm² section cables (AWG20) for +24V_{DC} logic supply (J3-11 and J3-20).**
- To ensure a correct electric wiring, and for electric safety, strip the wire up to 6-8mm, or use an appropriate cap.
- For "Frequency main reference input, use shielded cable.
- For information, see *"5.09 Optoinsulated digital input: NPN, PNP and Line Driver" pag. 34*, *"5.10 Optoinsulated digital output: NPN and PNP" pag. 35"5.11 Not insulated input" pag. 35*.

5.05.1 Cable for J3

Wiring connections and pins numbering for J3 connector is shown below:

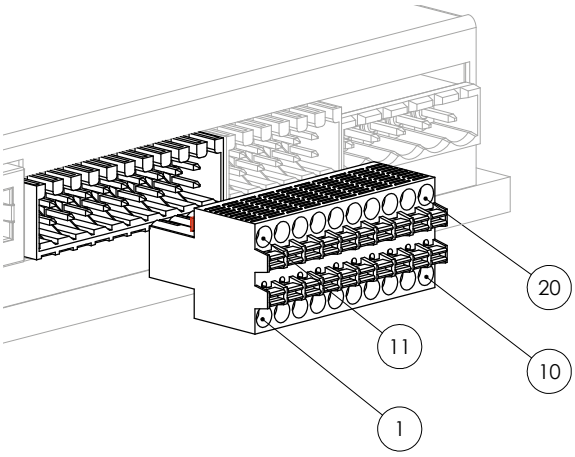

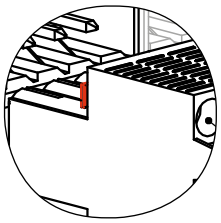

Please ensure that insertion hook of connector is facing upwards.

5.06 J4 connector: Feedback

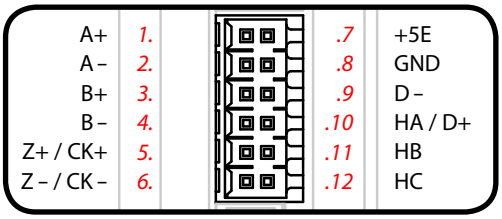

Connector TYPE	**Double row, pitch 3.5mm**
Utility	Motor feedback: incremental or SSI absolute encoder and HALL sensors.
N° pins	**12**

PIN	J4 connector description	
1	A +	Differential line driver (5V) input for incremental channel A.
2	A –	
	A	Single (5V) Open Collector and Push Pull input for incremental channel A.
3	B +	Differential line driver (5V) input for incremental channel B.
4	B –	
	B	Single (5V) Open Collector and Push Pull input for incremental channel B.
5	Z + / CK+	Differential line driver (5V) input for channel Z of incremental encoder.
6	Z – / CK –	Differential line driver (5V) output for CLOCK data for SSI absolute encoder.
	Z	Single (5V) Open Collector and Push Pull input for incremental channel Z.
7	+5E	+5V encoder supply and for pull up resistors.
8	GND	Common Ground for encoder supply and signals.
9	D –	Differential line driver (5V) input for DATA for SSI absolute encoder.
10	(HA) / D +	
	HA / (D +)	HALL sensor A signal
11	HB	HALL sensor B signal
12	HC	HALL sensor C signal

NOTES:

- Monitored fieldbus: for information, see *"7.03 Diagnostics" pag. 103*.
- Use shielded cable and connect shield to PE. Keep I/O cables far from supply and feedback cables.
- To ensure a correct electric wiring, and for electric safety, strip the wire up to 6-8mm, or use an adequate cap.
- In order to use cable lenght between 50m and 100m, ti's recommended to use incremental encoders that allow not to exceed 250kHz, during application rated speed.
- For absolute encoders, whose sum of single-turn and multi-turn bit is higher than 15, it's recommended to use cable lenght lower than 50meters.

HALL sensor sequence is shown below:

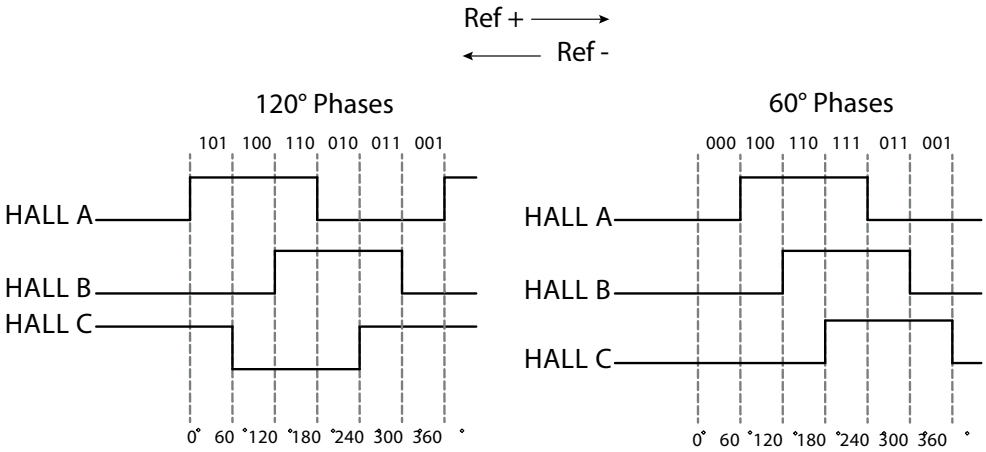

5.06.1 Cable for J4

Wiring connections and pins numbering for J4 connector is shown below:

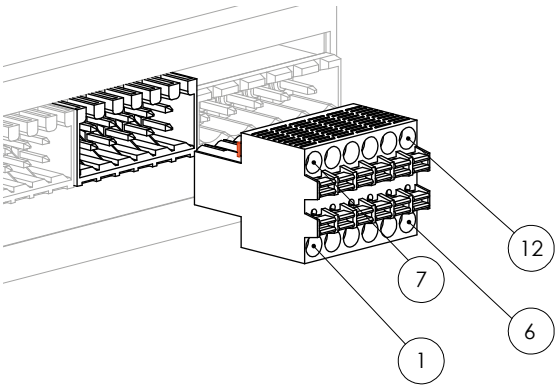

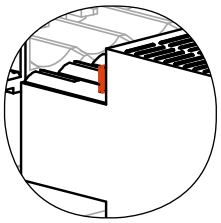

Please ensure that insertion hook of connector is facing upwards.

Wiring connections for external pull-up resistors on J4 connector for Open Collector incremental encoder is shown below:

Pull-up with 1kΩ internal resistor

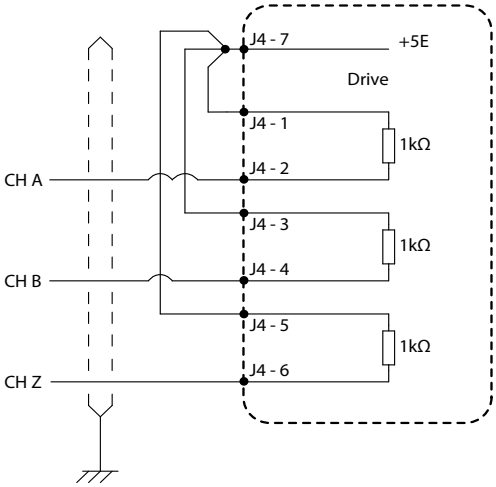

Pull-up with external resistor

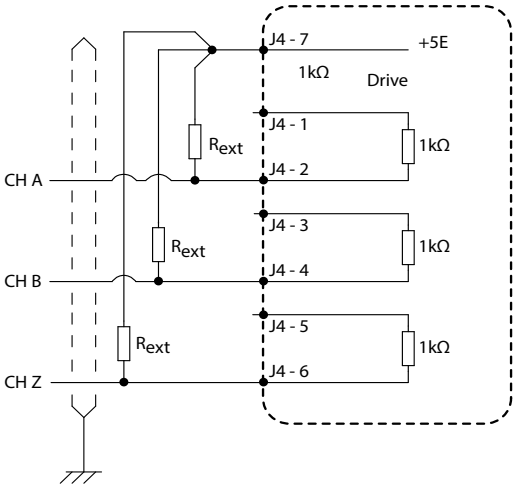

External resistor must be dimensioned according to main feedback encoder used and cable shield must be connected to Power Earth near the drive.

5.06.2 Wiring a H.D.T. motor B05 and B07 series

Follow the tables reffered to motor cable colour code, for the connection with H.D.T. motors with following features:

1. **absolute SSI encoder for motors:**
   - **cod. 480***: ST 12bit + incremental channels, LD-5V
   - **cod. 500***: MT 12bit and ST 17bit, LD-5V, only for B07.

N. PIN DRIVE J4 CONNECTOR	Absolute SSI LD 5V		ENCODER CABLE COLOUR		N. PIN MOTOR CONNECTOR
	cod. 480	cod. 500			
1	CH A+	-	GREEN		5
2	CH A–	-	BROWN		6
3	CH B+	-	YELLOW		7
4	CH B–	-	ORANGE	PINK	8
5	CK+		VIOLET		14
6	CK–		WHITE/GREEN		13
7	+Vdc		RED		3
8	GND		BLACK		4
9	DATA–		RED/BLUE		12
10	DATA+		GREY		11
11	-		-		-
12	-		-		-
-	-		Shield		1

2. **incremental encoder for motors:**
   - **cod. 2* or 280***: 1024ppr, LD-5V

N. PIN DRIVE J4 CONNECTOR	Incremental LD 5V (cod. 2 o 280)	ENCODER CABLE COLOUR		N. PIN MOTOR CONNECTOR
1	CH A+	GREEN		5
2	CH A–	BROWN		6
3	CH B+	YELLOW		7
4	CH B–	ORANGE	PINK	8
5	CH Z+	BLUE		9
6	CH Z–	WHITE		10
7	+Vdc	RED		3
8	GND	BLACK		4
9	-	RED/BLUE		12
10	HALL A+	GREY		11
11	HALL B+	PURPLE		14
12	HALL C+	GREY/PINK		15
-	-	Shield		1

NOTES:

- incremental channels LD 5V, also using the absolute encoder cod. 480, can be sent to on PLC or CN via J6 connector in order to close the position loop.
- connect cable shield to -DC pin of J5 connector or to the PE point nearest to drive.
- All pins of motor side and colours cable not mentioned are unused.

5.06.3 Wiring a H.D.T. motor MS04 and MS06 series

Follow the table reffered to motor cable colour code, for the connection with H.D.T. motors with following features:

1. **incremental encoder for MS motor:**
   - **cod. 200***: 2500ppr, LD-5V, encoder output with flying MATE'N'LOK capsule (AMP 172171-1) and plug (AMP 172163-1).

N. PIN DRIVE J4 CONNECTOR	FUNCTION	EXTENSION ENC. CABLE		ENCODER MOTOR CABLE	
		COLOUR		AMP 172163-1 / AMP 172171-1 N. PIN	COLOUR
1	CH A+	GREEN		9	BLUE/BLACK
2	CH A–	BROWN		10	BLUE
3	CH B+	YELLOW		11	GREEN
4	CH B–	ORANGE	PINK	12	GREEN/BLACK
5	CH Z+	BLUE		13	YELLOW
6	CH Z–	WHITE		14	YELLOW/BLACK
7	+Vdc	RED		1	RED
8	GND	BLACK		2	BLACK
9	-	-		-	-
10	HALL A+	GREY		7	WHITE
11	HALL B+	PURPLE		5	GREY
12	HALL C+	GREY/PINK		3	BROWN
-	-	Shield		15	*SHIELD*

NOTES:

- connect cable shield to -DC pin of J5 connector or to the PE point nearest to drive.
- All pins of motor side and colours cable not mentioned are unused.

* For information about H.D.T. brushless motors (B05, B07, MS04 and MS06 series), refer to technical manuals downloaded from internet corporate site:

www.hdtlovato.com

5.07 J5 connector: Power and motor supply

DO NOT connect an esternal supply on terminals U, V, W.
DO NOT connect cable when drive power supply is off and motor is rotating.
Before providing power supply voltage, ensure that J5 connector is properly inserted.
Connect correctly U,V,W wiring both drive and H.D.T. motor: the inversion of the phases do not invert the direction of rotation of the motor.

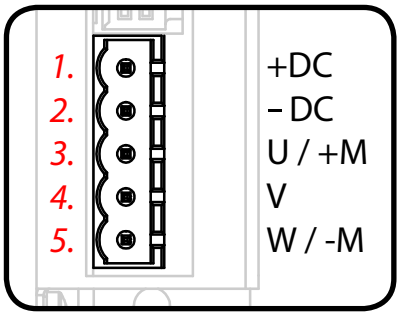

Connector TYPE	**Power connector, pitch 5mm**
Utility	Drive DC power supply and motor supply.
N° pins	**5**

PIN	J5 connector description	
1	+DC	DC power supply connection.Ensure that -DC pin, power cable shields and encoder cable shield are connected to Power Earth. See *"Ch. 4 Supply and quick start" pag. 19*. Monitored voltage: for information, see *"7.03 Diagnostics" pag. 103*.
2	–DC	
3	U / +M	Motor connection, U phase for brushless motor or +M pole for continuous current motor
4	V	Motor connection, V phase for brushless motor
5	W / –M	Motor connection, W phase for brushless motor or –M pole for continuous current motor

5.07.1 Cable for J5

Wiring connections and pins numbering for J5 connector is shown below:

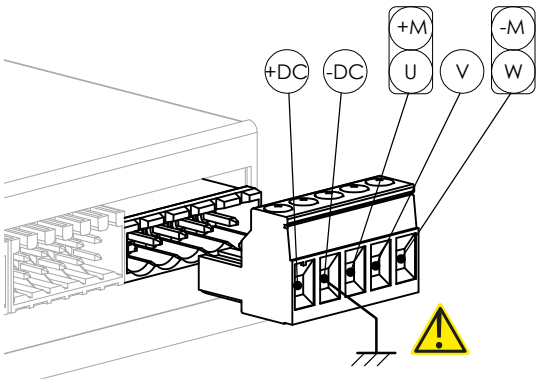

Power cable choice must be performed in function of absorbed motor current. Recommended cable section is shown below in function of drive size:

Sizes	Section - mm^2 (AWG)
DGFox60 EVO 2.5/5	1 mm^2 (AWG17) Shielded with shield connected to PE
DGFox60 EVO 5/10	1.5 mm^2 (AWG15) Shielded with shield connected to PE
DGFox60 EVO 8/16	1.5 mm^2 (AWG15) Shielded with shield connected to PE
DGFox60 EVO 10/20	2.5 mm^2 (AWG13) Shielded with shield connected to PE
DGFox60 EVO 13/26	2.5 mm^2 (AWG13) Shielded with shield connected to PE

For information about H.D.T. AC brushless motors wiring, refer to technical manuals downloaded from internet corporate site:

www.hdtlovato.com

5.08 J6 connector: incremental encoder repetition

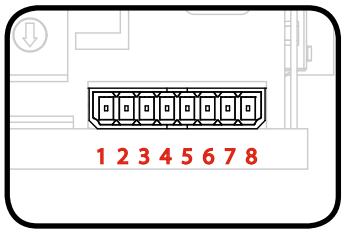

Connector TYPE	**Push-in, pitch 2.5mm**
Utility	5V hardware buffered Line-Driver output for incremental channel and zero index derived from main feedback incremental encoder.
N° pins	**8**

PIN	J6 connector description	
1	SHIELD	Cable shield connection
2	GND	Common Ground
3	Z +	Differential line driver (5V) output for incremental channel Z.
4	Z –	
5	B +	Differential line driver (5V) output for incremental channel B.
6	B –	
7	A +	Differential line driver (5V) output for incremental channel A.
8	A –	

5.08.1 Cable for J6

Wiring connections and pins numbering for J5 connector is shown below:

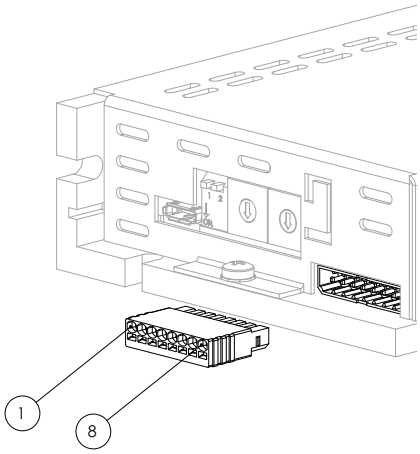

NOTES:

- Use shielded cable. Ensure to connect shield at least on encoder repetition receiver device.
- Keep I/O cables far from supply and feedback cables.
- To ensure a correct electric wiring, and for electric safety, strip the wire up to 6-8mm, or use an adequate cap.
- In order to use cable lenght between 50m and 100m, ti's recommended to ensure that encoder repetion channels do not exceed 250kHz, during application maximum speed.

5.09 Optoinsulated digital input: NPN, PNP and Line Driver

The drive allows an optoinsulated connection for frequency speed reference input:

1. DIRECTION / CHA / CCW data input.
2. PULSE / CHB / CW data input.

LINE DRIVER connection is available upt to +5V; for NPN and PNP connection, signal voltage must be lower than +30V, or equals.

In some condition, an external resistor is needed for the connection (it's recommended to position it on drive size, as shown in picture below). Anyway, do not exceed input voltage threshold (+30V).

Failure to observe this note could lead to drive damage.

In order to prevent high frequency noise, earth connected shielded cables are recommended; connect shield to Power Earth both on drive side and source side.

Different connection topologies about **frequency speed reference input** are shown below:

NPN SIGNAL

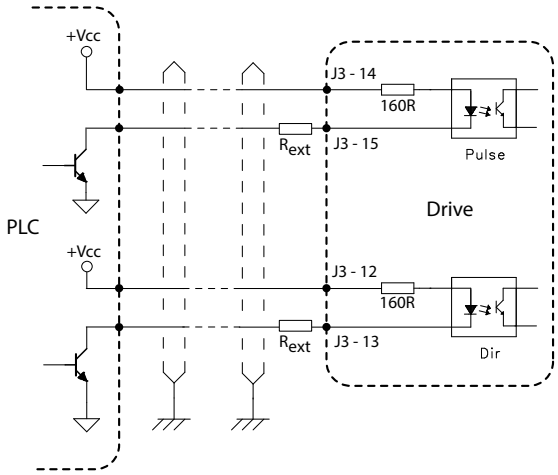

PNP SIGNAL

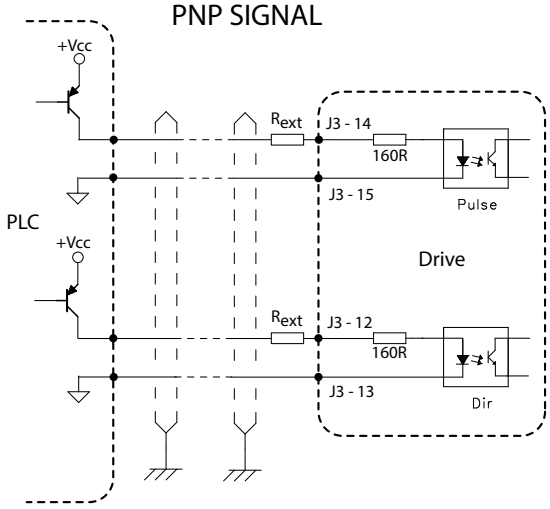

LINE DRIVER SIGNAL

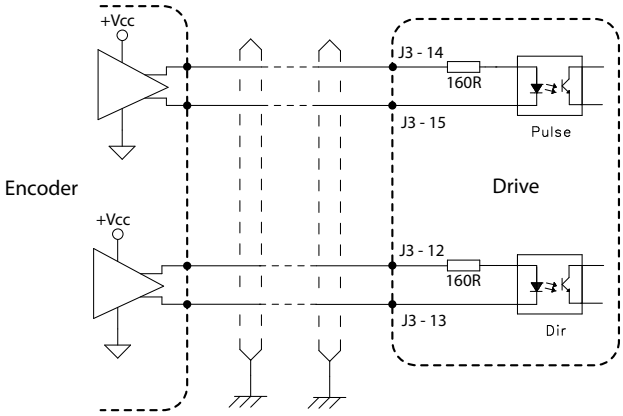

External resistor selection (R_{ext}) is in function of Vcc supply voltage value. Refer to following table:

	Logic Supply Vcc		
	+12V	+24V	+5V
Rext	680Ω - ¼ Watt	1.8kΩ - ½ Watt	0Ω
Line Driver	*Not available*	*Not available*	√

5.10 Optoinsulated digital output: NPN and PNP

The drive allows an optoinsulated connection for output signal below, up to +30V signal voltage value:

- 'OUT 0' digital output.
- 'OUT 1' digital output.

Digital output ports allow to connect an external control unit (PLC) equipped by both NPN and PNP type or a mechanical switch (relay) both NPN and PNP type.

Do not exceed current threshold forced by electrical features: $I_{C_{max}}$ < 50mA. ***Failure to observe this note could lead to drive damage.***

Different connection topologies about **digital output** are shown below:

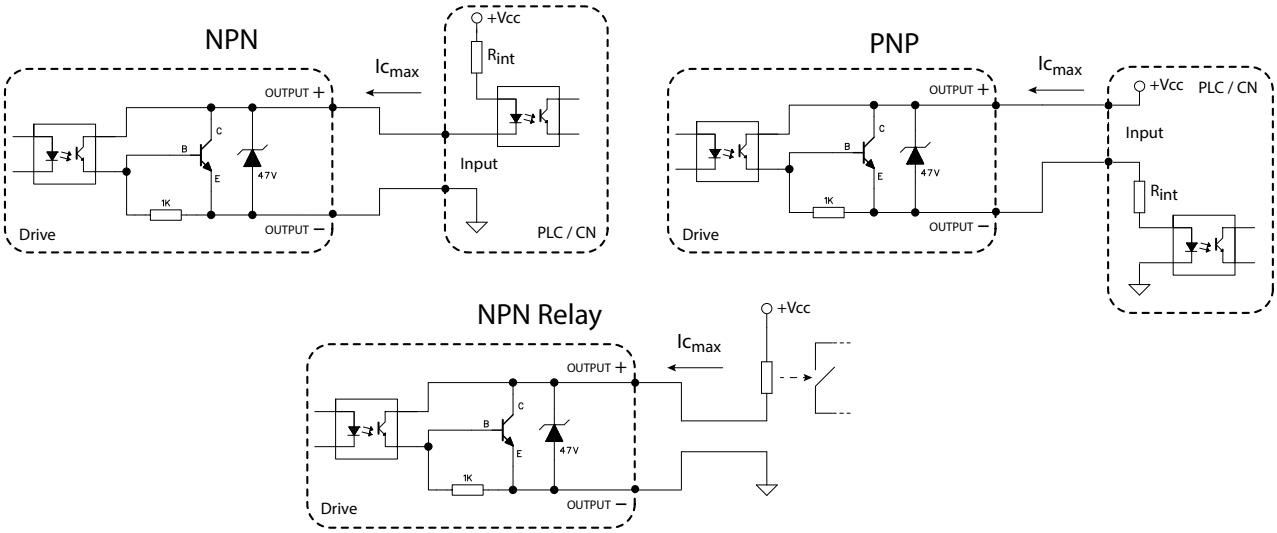

5.11 Not insulated input

The drive allows N° 8 not insulated input:

- N° 1 analog main reference input ±10V (12bit).
- N° 1 analog auxiliary reference input 0/+10V (12bit).
- N° 6 digital input 10/30V.

Ground reference (GND, pin 11 of J3) is common among every not insulated input, with exception for analog reference input, that have an own Ground reference (GND, pin 3 of J3).

Block diagram for each **not insulated input** is shown below:

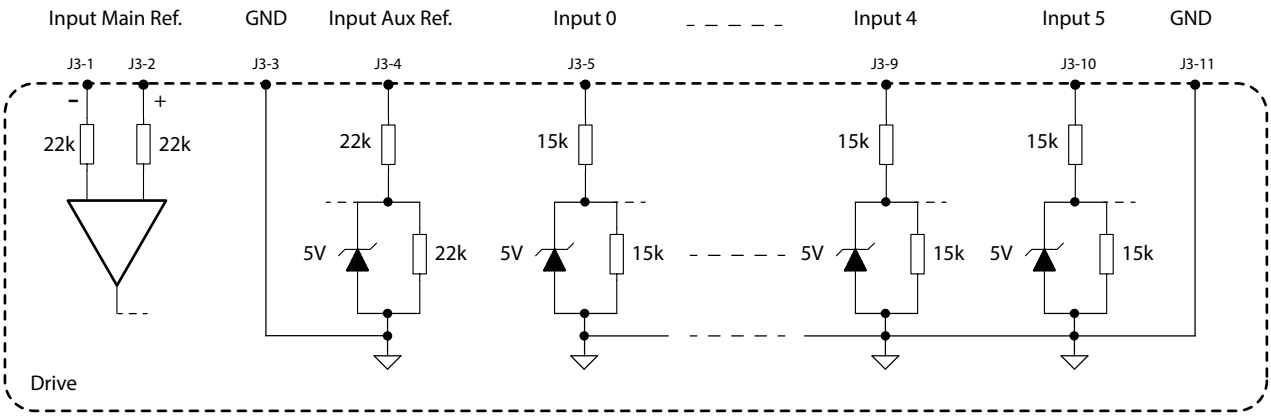

Ch. 6 Operation mode

Please, see *"2.04 Technical data" pag. 11* for details about operation mode.

Operation mode supported by drive are listed below:

1. Input / Output (I/O): analog and digital input and output.
2. Modbus RTU (for CM configuration only).
3. Canopen® CIA301 and CIA402 protocol (for CM configuration only).
4. Ethercat CoE CIA402 protocol (for EC configuration only).
5. Profinet RT Profidrive protocol (for PN configuration only).

Control topologies supported by drive, with rotary and linear or tubular motor type, are listed below:

1. *Torque, Speed and Speed with Torque limit* control via analog 12 bit input reference or via fieldbus parameter with each supported feedback type.
2. *Position* control with each supported feedback type and related to desired operation mode:
   - *Single Target positioner* via analog reference or via single parameter.
   - *Table Target Positioner up to 64 target:* cyclic/acyclic target or via digital input selection or via input-start selection.
   - *Electronic Gearbox* via frequency reference (CHA/CHB, pulse/direction and CW/CCW).
   - *Electronic Cam* via frequency reference (CHA/CHB, pulse/direction).
3. *Sensorless speed* control.
4. *Pressure* control via analog input references or via fieldbus parameter.

Main drive status, during operation, are defined by LEDs signaling devices and are shown below; please see *"7.01 LEDs signaling devices and drive status" pag. 101*):

- *SWITCH-OFF state*: drive will not provide torque to motor and shows Drive OK or FAULT condition.
- *SWITCH-ON state*: drive will provide torque to motor in order to keep it stopped.
- *OPERATION ENABLED state*: drive will follow speed, torque or position reference, depending on choosen control topology.
- *Drive OK or FAULT condition*: drive will show Drive OK condition, only when there are no active alarms. If an alarm occurs, drive will show a *FAULT condition*.

Drive has a firmware that communicates with proprietary **Caliper** software: the using of this software leads to:

- select the desired drive operation mode.
- select the motor between rotary and linear or tubular type, with related feedback.
- configure all motor and drive parameters.
- save, modify or reload previous configured motor and drive parameters.
- configure, reload, modify and save all parameters for drive integrated software applications.
- monitor drive and motor during operation.
- perform debug of the entire machine quickly viewing all parameter addresses related to Fieldbus operation mode and emulating functionality and commands.
- perform HALL sensors autophasing.
- configure analog input and configure digital I/O ports.
- configure drive to react in alarm conditions.
- configure languages.
- use Scope function.

6.01 Introducing Caliper

Caliper software requires a PC Windows98® or later with USB2.0 ports and installation software pack can be downloaded from enterprise web site, after registration and login:

www.hdtlovato.com

During Caliper installation procedure, when Windows® gives message related to reliable installation driver origin, please accept all in order to go on with installation procedure; if not do so, Windows® will not reach H.D.T. drive and a new installation procedure is mandatory.

Caliper main window consists of:

1. a **Toolbar,** located at the top, that, via drop-down menu, allows to set the correct Caliper type related to drive connected; if a USB HUB 2.0 is used, it allows to connect with the desired drive. It allows to send to drive command signals, as SWITCH-ON, OPERATION ENABLED, RESET, emulating fieldbus protocol and I/O functions, and also to configure drive parameters in offline mode, perform HALL sensors autophasing and use Scope function.
2. a **State bar,** located at the lower, shows drive state and any active alarms, DC bus power supply voltage and firmware release for the connected drive.
3. a **Data Monitor**, located at the left column, gives information about connected drive size, actual drive operation mode (Fieldbus or I/O), actual control topology (Mode), motor speed and position parameters and drive current and temperature. Also actual digital I/O function and state (with a graphic view for state) is displayed.
4. a **Menu**, into a tree view, located at the right of *Data Monitor*, allows to set all drive parameters: operation mode selection (*Field Bus* menu item), motor and feedback Data parameters (*Motor Data* menu item), advanced setup parameters (*Advanced Setup* menu item) and control topology selection (menu item depends on desired operation mode in *Field Bus* menu item).
5. a **Drive Data** allows to configure Menu parameters directly, set desired Application related to Factors submenu and to visualize all parameter addresses related to Fieldbus operation mode.

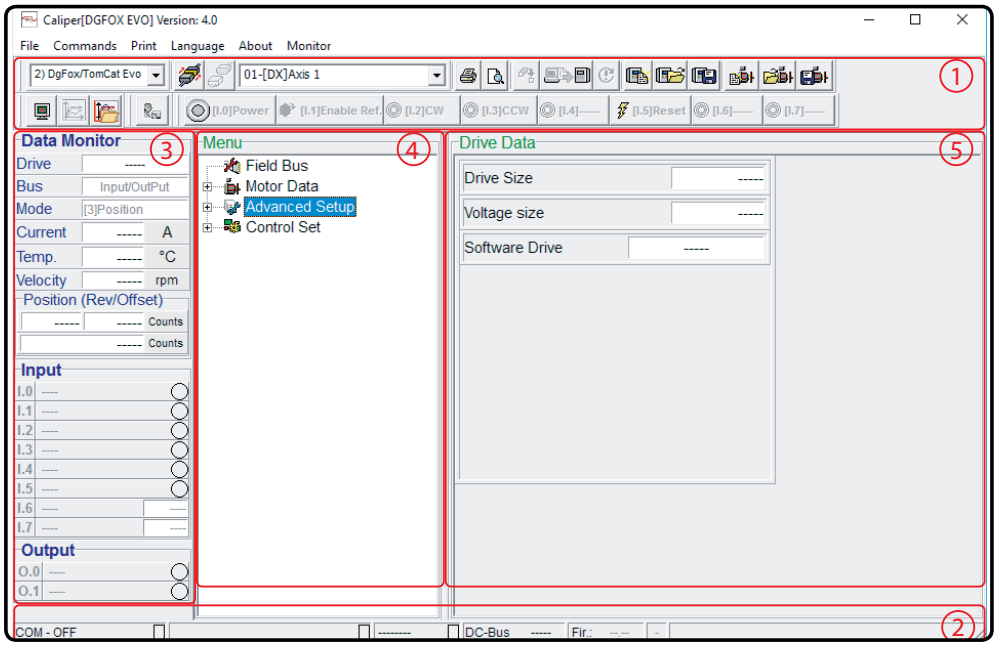

Caliper present version and later, extend compatibility with 3.xx previous version in order to use a unique software to configure all H.D.T. drive families that support it, loading and converting previous files, selecting the correct Caliper version via drop-down menu into Toolbar. Present maual will describe Caliper 4.0 and later releases.

NOTES:

- Pointing mouse on icons, a brief description will appeare, showing the function.
- To confirm any modified parameters (and to automatically send to drive), press ENTER key, or you can enable Autosave function in Commands menu to send any modified parameters to drive (a label 'A' = Automatic appears in state bar).
- There is an 'Hidden Menu' (reachable only entering a password in Commands menu) that allows to set other critical parameters not interesting for user (voltage, I2T drive and temperature thresholds). For other informations, please contact our technical support office.

Main software icons, in the toolbar, are described below:

Icon	Description
	Drive and PC connection: choose correct Caliper Version and desired drive, then press to connect the drive. State bar, in the lower, shows if connection is OK or not.
	Drive and PC disconnection: USB comunication is disabled and drive continues to operate according to latest modifided parameters before disconnection.
	Loading just set configuration into drive memory. It's recommended always to perform backup files for drive and motor parameters. *Load default parameters*: factory settings will reload into drive memory
Ch. 6.07	*Motor autophasing*: a window is opened to perform motor autophasing, that lets to verify poles and HALL sensors allignment. Please ensure to set correct encoder pulse number before proceding. Rotor must be free to rotate.
	Local control via Caliper: this key lets to enable, into Caliper software, all **emulated signals and parameters** related to each mode operation. If Local control is pressed, **all real fieldbus and I/O signals** are NOT considered. Howerver, some input signals, as limit switch, are considered for machine debug operation. Enter password, called "1035", into Commands Menu to enable *Local control via Caliper*.

Power 'SWITCH-ON'	Lock On/Off 'Ramp unlock'
Oper. 'OPERATION ENABLED'	RFG On/Off 'Ramp enable'
I.2 CW 'CW' (clock wise)	Start HP , HP 'Start Home Position'
I.3 CCW 'CCW' (counter clock wise)	Ass./Rel. , A/R 'Absolut/Relative' reference
I.4 input 'IN 4' Input	St.Q. 'Start Quota'
Reset 'RESET'	CHG 'Change' (change set)
Halt 'HALT'	Res Enc Res pos 'Reset Encoder' e 'Reset Position'
Ref On/Off 'Ramp reference enable'	Start 'Axis enable'
	Jog+ Jog- 'JOG back and forth'

Icon	Description
Ch. 6.13	*Scope:* a window is opened to show Scope that allows some drive variables monitoring. *Open a Scope file* saved into a PC directory.
	System state: a window is opened to show any active or occured alarms with ID code e type information about alarms and warnings.
	Drive setting: a window is opened to show all drive setting parameters and lets to create a calibration setup without USB active connection yet. *Save all drive calibration setup* for motor + drive into a PC directory. This procedure will save all drive and motor data into default folders created from Caliper software at first program launch. Saving folder directory can be changed. *Open a drive calibration setup* saved into a PC directory.
	Motor setting: a window is opened to show all motor setting parameters and lets to create a calibration setup without USB active connection yet. *Save all motor calibration setup* and PID current regulator into a PC directory. *Open a drive calibration setup* saved into a PC directory.

6.02 Caliper Data Monitor

Data Monitor shows drive main parameters listed below:

1. Drive size, operation mode and set control topology
2. Current provided to motor (A) and Drive heat sink temperature (°C)
3. Speed (with fixed unit):
   - *RPM*: rotary motor.
   - *mm/s*: linear or tubular motor.
4. Position (with fixed unit):
   - *N. of revolution / counts per turn* (16bit) *and total counts* (32bit with 1bit for sign management): rotary motor.
   - *mm*: linear or tubular motor.
5. Digital I/O state
   - Digital input are programmable and enabled depending on choosen operation mode and choosen control topology.
   - Analog input (12bit) with sign management whose values are displayed and realtime updated.
   - Digital output are programmable and always enabled.
   - Graphic LED for digital input activation.

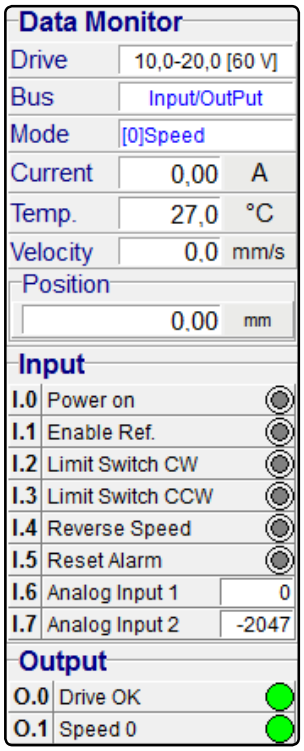

NOTES:

- Graphics allows to see I/O function selected and if they are enabled; for digital input, the external LED ring is activated if hardware input is on High level and internal circle is activated when input function is enabled.
- Visualized speed and position parameters units can not be changed and depend on motor type (rotary and linear or tubular). Drive position, speed and acceleration reference units can be changed, instead. For further information, please see *"6.05 Factors" pag. 57*.
- For further information about digital I/O, please see *"6.08 Digital I/O" pag. 62*.

6.03 Caliper Menu

In order to modify drive parameters, please ensure to:

- enable USB connection with desired drive: if connection is missing, parameters can be set clicking *Drive setting* key; then save configuration into PC directory in order to load it into drive memory during active USB connection.
- enable *Local control via Caliper* icon key and ensure to set drive state in SWITCH-OFF (disable related icon key).

Whenever a *Menu* item is selected, all relevant parameters appear into *Drive Data* window: to confirm any modified parameters (and to automatically send to drive), press ENTER key, or you can enable Autosave function in Commands menu to send any modified parameters to drive; last modified parameters highlighted in blue track.

Menu items are listed below:

1. **FIELD BUS**: operation mode selection.
2. **MOTOR DATA**: motor and feedback parameters settings.
3. **ADVANCED SETUP**: regulator, filter, limiters settings and alarms managing.
4. The fourth Menu item depends on the desired operation mode and can be set in:
   - **Control Set**: I/O operatio.
   - **Modbus**: Modbus RTU operation.
   - **CanOpen CIA301** e **CanOpen 402**: Canopen® operation.
   - **Ethercat:** Canopen® CIA301 and CIA402 over Ethercat operation.
   - **Profinet** and **Profidrive:** Profinet RT PRofidrive Protocol operation.

For example, *Control Set* item into Menu, with its contents in *Drive Data* and during I/O operation, is shown below:

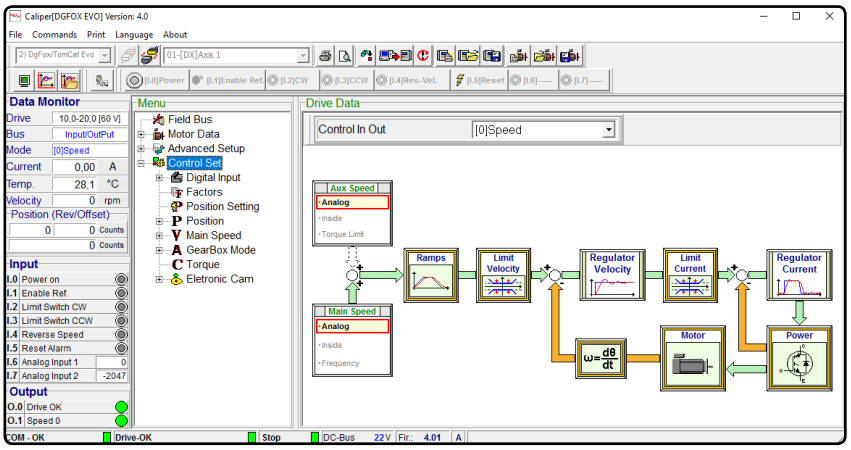

NOTES:

- *Control Set* item allows an overview of choosen control type into a block diagram (see previous image). Each time a block is enabled (ramps, filter and limiters), these blocks appear inside block diagram in appropriate location.
- Into *Drive Data* window, a single block diagram can be selected and can be opened into a new window where main block parameters can be set, without looking for it into *Advanced Setup* (see image below):

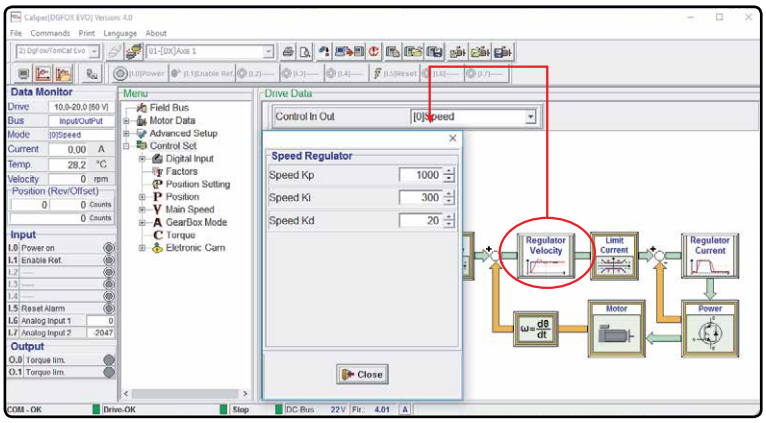

6.03.1 Menu: 'FIELD BUS' item

'Field Bus' item allows to:

- set drive name, usefull for identification between a multiple axis connection via USB HUB.
- select the desired operation mode.

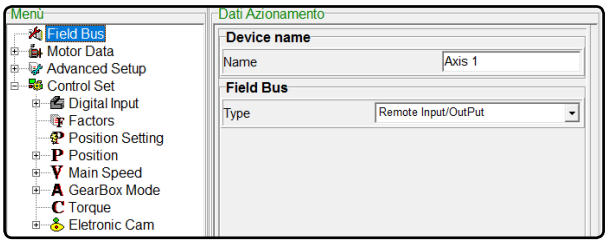

Operation mode: I/O (Input/Output)

During this operation mode, *Control Set* item is enable into Menu and lets to configure analog/digital input and desired control topology.

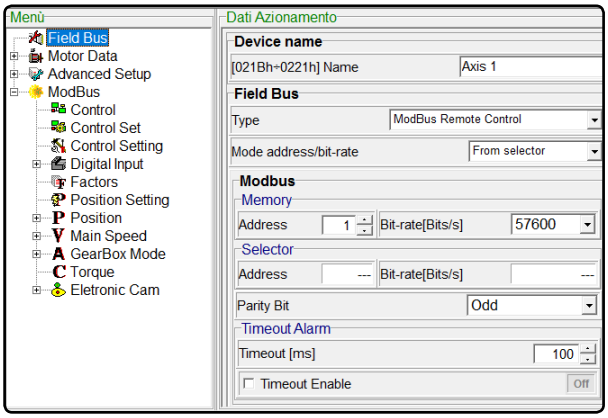

Operation mode: Modbus RTU

This screen allows to set fieldbus Address (up to 247) and comunication Baudrate (up to 57.6KBit) from Caliper software or from hardware rotary switch (up to 99) and dip-switch (see *"6.06 Rotary switches and dip switch" pag. 60*).

A Time-out comunication alarm can be configure to report failure comunication after a time of inactivity.

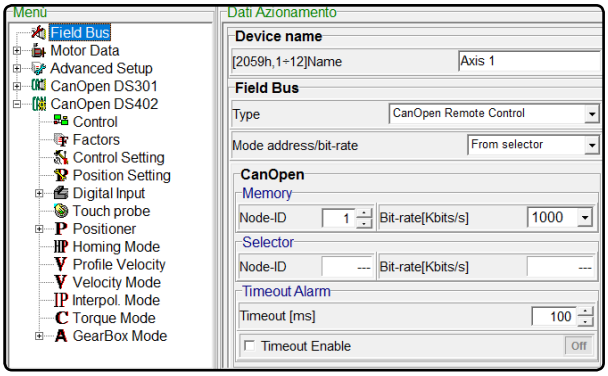

Operation mode: Canopen® CIA301 and CIA402

This screen allows to set fieldbus Node (up to 127) and comunication Baudrate (up to 1Mbit) from Caliper software or from hardware rotary switch (up to 99) and dip-switch (see *"6.06 Rotary switches and dip switch" pag. 60*).

A Time-out comunication alarm can be configure to report failure comunication after a time of inactivity.

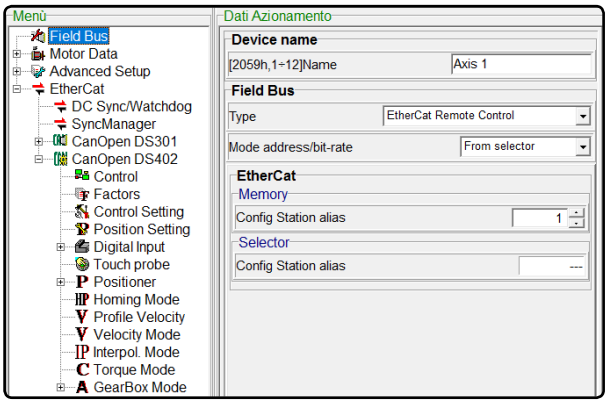

Operation mode: Ethercat CoE CIA301 and CIA402

This screen allows to set "Station Alias" addressing type via Caliper (up to 65536) or via hardware rotary switch (up to 99).

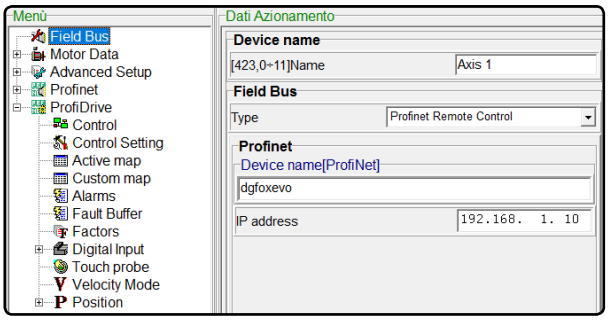

Modalità di funzionamento: Profinet RT Profidrive

This screen allows to set Device Name and IP Address for Profinet comunication.

Operation mode is settable only if drive is in SWITCH-OFF state:

- during Fieldbus operation, to ensure witch drive and motor parameters are settable, related to drive state, please see related fieldbus user guide, downloadable from enterprise web site:

  www.hdtlovato.com

- during I/O operation, parameters can be modified only via software Caliper; if parameter is not changeable, it will appear grey coloured and it will be not selectable.

6.03.2 Menu: 'MOTOR DATA' item and sub-menu 'FEEDBACK'

'Motor Data' item allows to enter parameters and permanent magnets motor type connected to drive.

I2T motor protection is settable and identifies a motor overload limit:

- it's a time (settable from 1sec to 3000sec.) within which drive will provide to motor a current equal to twice the rated current; default value is 10sec.
- the choice of this parameter is normally related to motor physical size.
- if stress is too high, drive will provide an appropriate alarm/warning and will limit motor current equal to '*Nominal Current*' parameter.

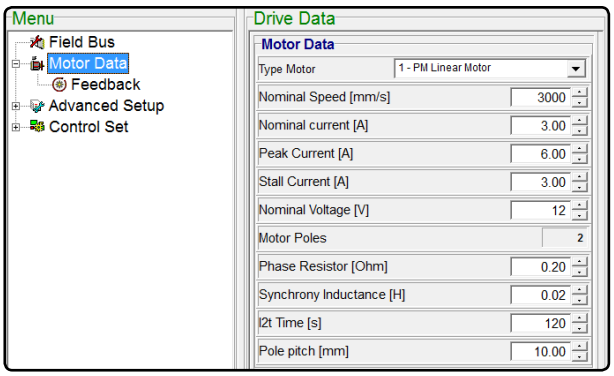

It's possible to set motor type from drop-down menu:

- ***permanent magnets rotary motor***
- ***permanent magnets linear (or tubular) motor***
- ***brushed DC motor (continuous current)***

Then, depending on choosen motor type, it's possible to set all parameters useful to a correct operation (including motor I2T protection).

NOTES:

- During torque control mode, the percentage of torque supplied to the motor from drive is reffered to parameter called '*Nominal Current*'.
- Consider that maximum number of poles for linear or tubular motor is 2 and Pole-pitch must be set correctly; it's possible to connect a brushless rotary motor wth 50 poles maximun, instead.
- *Nominal Speed* parameter units depends on choosen motor type (rotary and linear or tubular). For further informations, please see *"6.05 Factors" pag. 57*.

'Feedback' sub-menu item allows to choose correct feedback and to enable motor cogging compensation.

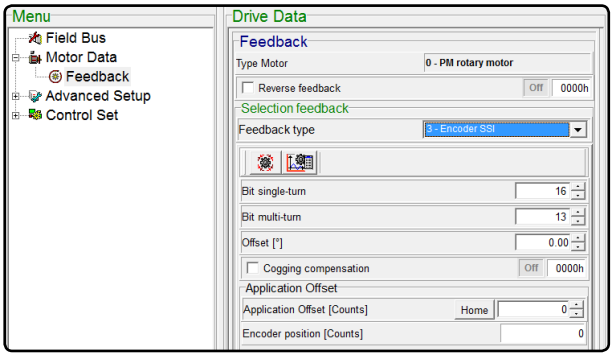

It's possible to set, from drop-down menu:

- ***Incremental encoder without HALL sensors***
- ***Incrementale encoder with HALL sensors***
- ***Only HALL sensors (trapezoidal control type)***
- ***SSI encoder: absolute single-turn and multi-turn***
- ***Sensorless***

Ensure to select correct feedback type before connecting encoder.

Incremental encoder without HALL sensors

» If incremental encoder without HALL sensors is used, after SWITCH-ON command, drive will perform a rotation angle, more or less evidence, related to real shaft position. I's possible to perform this procedure at first start, at every start or at every reset command, as set into drop-down menu.

» Encoder hardware type supported are Line Driver and Open Collector/Push-Pull.

» Motor cogging map is available only if encoder provides zero index.

Incremental encoder with HALL sensors

» If incremental encoder with HALL sensors is used, it's mandatory to correctly set offset-encoder parameter (all H.D.T. motors are set to 0°) performing the autophasing procedure if third part motor is used (*"6.07 Motor autophasing" pag. 61*).

» Real shaft position related to HALL sector position is displayed.

» Motor cogging map is available only if encoder provides zero index.

Only HALL sensors

» For a trapezoidal control (DC brushless motors), only HALL sensors feedback is used.

» Real shaft position related to HALL sector position is displayed.

SSI absolute encoder

» If SSI absolute encoder is used, it's mandatory to correctly set offset-encoder parameter (all H.D.T. motors are set to 0°) performing the autophasing procedure if third part motor is used (*"6.07 Motor autophasing" pag. 61*).

» It's possible to set the "application offset" parameter related to encoder absolute 0 position: keep motor on desired position and press 'Home' key into sub-menu *Feedback* inside *Drive Data*, to store the offset (this parameter is mapped in every operation mode supported).

» Besides, it's possible to connect encoders having single-turn and multi-turn resolutions higher than 16bit and 15bit respectively; if single-turn and multi-turn bit sum is higher than 31bit, drive provides an error. If single-turn bit are higher than 16bit, drive performs an automatic truncation of excess bits; by the way drive operates correctly, affecting offered resolution, limiting it to 16bit.

» Istantaneous value for encoder absolute position is visible visibile nel sottomenu *Feedback* nella finestra *Drive Data.*

» Motor cogging map is available.

Sensorless

For further information about sensorless control tuning, please see *"6.23 Sensorless loop tuning" pag. 96*.

NOTES:

- For further information about motor cogging map, please see *"6.12 Motor cogging torque compensation" pag. 71*.

'Observer' sub-menu item allows to enable and set gain and bandwidth for observer system applied to position feedback from motor: with this tool, it's possible to increase round resolution up to 16bit. Observer system is available for all supported feedback (with exception for sensorless control).

It's useful to reduce motor noise keeping unchanged application bandwidth.

It's disabled for default condition, but it's recommended when:

- encoder feedbacks, that provide resolution lower than 1000ppr or lower than 12bit, is used.
- HALL sensor feedbacks is used.

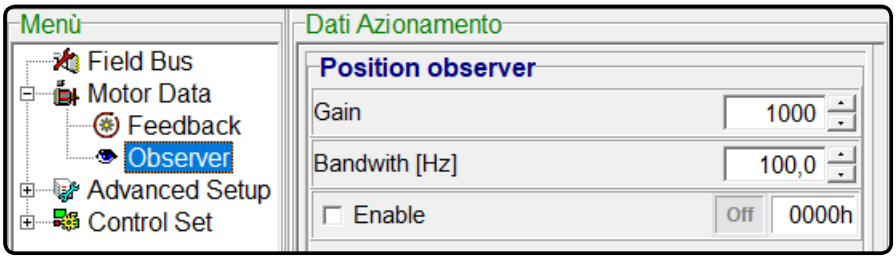

Observer function could lead to system instability, so please follow tuning instruction at *"6.22 Closed loop regulation tuning" pag. 92*.

6.03.3 Menu: 'ADVANCED SETUP' item

'Advanced Setup' item allows to set regulators, filters, limiters, alarms managements, brake managements and digital outputs and it is independent of the operation mode selection.

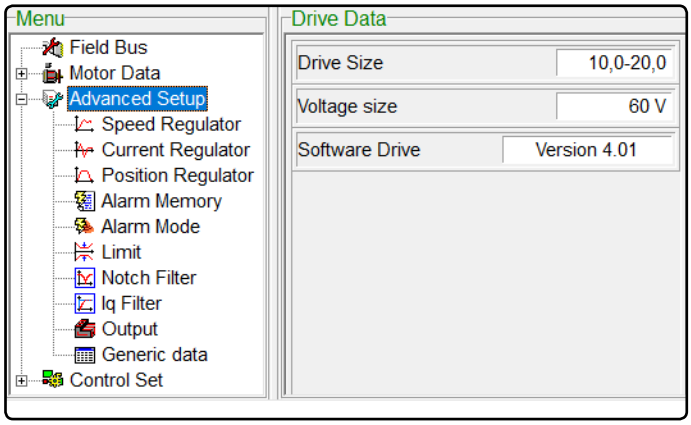

This item shows:

- ***firmware release.***
- ***drive size.***
- ***drive rated voltage.***

This item allows to set:

- ***control loop gains.***
- ***alarms with relevant reset manegment.***
- ***filters and limiters.***
- ***digital outputs function.***

To set each of items in the sub-menu, just select it and modifing window will appear in *Drive Data*.

Advanced Setup sub-menu items are listed below:

1. *Speed Regulator:* PID speed regulator.
   - Increasing value, coefficients K_P, K_I increase their effect.
   - Flag to enable compatibility with previous FW version 3.xx: if flag is enabled, PID parameters perform same regulation loop of previous version; if flag is disabled, to obtain the same regulation loop, it's necessary to set K_P value 8 times higher and K_I value 2 times higher.
2. *Current Regulator:* PID current regulator (set from 1 to 2000). Increasing value, coefficients K_P, K_I increase their effect.
3. *Position loop:* position regulator. Increasing value, coefficients K_P increases its effect. Parameter for choosing feedback to close position loop (motor feedback or external encoder). Parameters for axis ratio between motor and encoder and encoder pulse number.
4. *Alarm Memory:* occured alarm history up to 16 maximum stored locations, with description; alarm list can be erased.
5. *Alarm Mode:* some alarm managment including Overvoltage, Undervoltage and drive I2T; they can be set as shown below:
   - *Autoreset* or *Stored* for voltage thresholds.
   - *Rated current limit* or *Cyclic auto reset* for drive I2T warning; also it's possible to define the I2T alarm after parameter time elapsed.
6. *Limit:* limiter for upper speed and current in percentage of motor rated current.
7. *Notch Filter:* notch filter enable and engage at desired frequency and attenuation.
8. *Iq Filter:* 1ST order time constant filter for quadrature current reference (set from 0.01ms to 30ms). Please be carefull using this filter that could lead to instability conditions.
9. *Output:* OUT0-1 digital output managment. For any information about output functions, please see *"6.08.1 Digital I/O functions" pag. 64.*
10. *Generic data:* flash memory (non volatile) location addresses available for customer and reachable only via fieldbus comunication.

NOTES:

- Drive position, speed and acceleration reference units depends on motor type between rotary and linear or tubular. For further information, please see *"6.05 Factors" pag. 57*.

6.03.4 Menu: 'Control Set' 'Modbus' 'CanOpen' 'Ethercat' 'Profinet' items

As already described above, the 4th Menu item depends of operation mode selection. Drive parameters for the type of selected control are settable, including:

1. Desired control topology via drop-down menu inside Drive Data window.
2. FACTORS setting (units and application type).
3. analog and digital input setting.
4. all parameters related to desired control topology.

To ensure a correct operation for entire application, FACTORS calculation procedure must be performed. This calculation is automatic and must be started via Caliper software. For further information, please see *"6.05 Factors" pag. 57*.

6.03.4.a Input/Output operation mode: 'Control Set' items

- *speed control (and speed with torque limit).*
- *torque control.*
- *electronic gearbox control (CHA/B, CW/CCW, Pulse/Direction).*
- *position control (single target positioner, analog positioner, cyclic table selection positioner or via digital input up to 64 target).*
- *electronic cam control.*
- *pressure control.*

For example, speed control with analog +/-10V input is shown below:

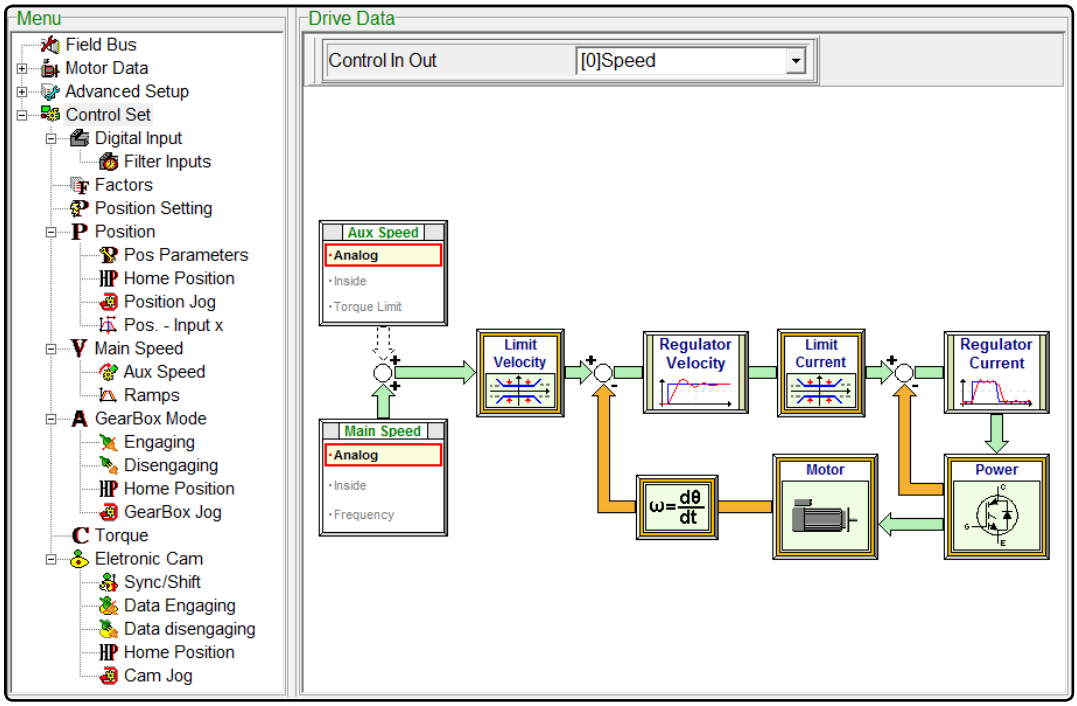

Control Set sub-menu items are listed below:

1. *Control setting*: Stop mode management during Fault Reaction and HALT conditions. For further information, please see *"6.04 Emergency stop functions" pag. 55*. Stop mode available are shown below (selectable from dropdown menu):
   - Disable power: motor inertia stop.
   - Ramp controlled stop and then disable power.
   - Ramp controlled stop keeping motor in standstill condition at power on.
   - Limit torque stop, setting desired torque limit.

2. *Digital Input:* drive digital input setting in I/O operation mode. For any other information about digital input functions, please see *"6.08.1 Digital I/O functions" pag. 64.*
   - *Filter Input*: input 1ST order filter parameters, in ms unit.
3. *Factors:* multiplier factors associated with input reference in order to modify scale resolution. Please see *"6.05 Factors" pag. 57*.
4. *Position Setting:* maximum admitted position error and maximum admitted recovery time setting; beyond these values drive provides an error/alarm condition.
5. *Position*: setting for all parameters related to desired position control between single target positioner, analog positioner, cyclic/acyclic table selection or via digital input or via input-start up to 64 target. For further information, please see *"6.09 Drive References" pag. 66* and *"6.19 Position control: positioner mode" pag. 86*.
   - *Pos Parameter:* profile setting and position procedure setting, software positive and negative limits and Homing offset.
   - *Position Jog:* JOG setting.
   - *Home Position:* HOMING procedures and parameters. For further information, please see Modbus user guide.
   - *Pos. - Input X:* index stop, at relative position, when event happens on INPUT X of drive I/O connector.
6. *Main Speed:* speed control and main speed reference setting between analog, inside or frequency. For further information please see *"6.09 Drive References" pag. 66*.
   - *Aux Speed*: auxiliary speed reference setting between analog, inside or torque limit.
   - *Ramps*: acceleration and deceleration ramp managment; linear ramp or S ramp (JERK parameter).
7. *GearBox:* gearbox axis rate management and engage and disengage settings; input type can be selected between *CHA/B*, *CW/CCW*, *Pulse/Direction* input reference. For turther information please see *"6.09 Drive References" pag. 66* and *"6.18 Position control: electronic gearbox mode" pag. 84*.
   - *Engaging:* engaging phase parameter set
   - *Disengaging:* disengaging phase parameter set
   - *Home position:* HOMING procedures and parameters. For further information, please see Modbus user guide.
   - *Gearbox JOG:* JOG setting.
8. *Torque:* torque control setting and input reference setting between analog and inside. For further information please see *"6.09 Drive References" pag. 66*.
9. *Electronic Cam:* Cam table and all parameter setting. For further information, please see *"6.09 Drive References" pag. 66* and *"6.20 Position control: electronic cam mode" pag. 88*.
   - *Sync/Shift:* isync parameter set and master/slave position shift setting.
   - *Data Engaging:* engaging phase parameter set
   - *Data Disengaging:* disengaging phase parameter set
   - *Home position:* HOMING procedures and parameters. For further information, please see Modbus user guide.
   - *Cam JOG:* JOG setting.
10. *Press:* pressure reference accuracy setting and fullscale setting for speed and pressure reference and for pressure transducer. For further information please see *"6.09 Drive References" pag. 66*. e *"6.21 Pressure control" pag. 90*.
    - *Setting:* safety pressure threshold setting, beyond which the drive introduces set speed limit. Speed variation is managed with ramp.
    - *Limit:* current and negative speed limit setting.
    - *Alarm mode:* overpressure and underpressure threshold setting and enabling.
    - *Pressure Reg.:* pressure ring regulators setting.
    - *Ramps:* pressure and speed ramps setting and enabling.
    - *Output:* analog output fullscale setting and output setting for pressure reached condition related to pressure and time window parameter.

6.03.4.b Modbus RTU operation mode: 'Modbus' items

Control type and state machine in picture:

- *speed control (and speed with torque limit).*
- *torque control.*
- *electronic gearbox control (CHA/B, CW/CCW, Pulse/Direction).*
- *position control (single target positioner, analog positioner, cyclic table selection positioner or via digital input up to 64 target).*
- *electronic cam control.*

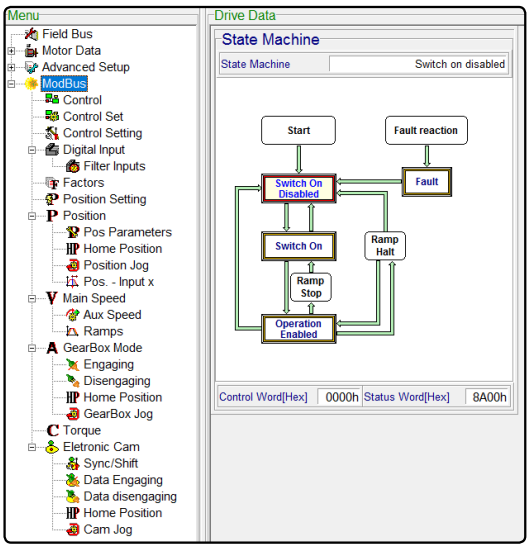

During fieldbus operation mode, Caliper software shows all Modbus RTU parameter addresses, nearby the parameter.

Same Modbus RTU protocol implemented inside DGFox60 EVO drive is è compatible with all other H.D.T. drive families that support it.

Modbus sub-menu items are listed below:

1. *Control:* Modbus RTU Control Word and Status Word informations.
2. *Control Set:* control type selection.
3. *Control setting*: Stop mode management during Fault Reaction and HALT conditions. For further information, please see *"6.04 Emergency stop functions" pag. 55*. Stop mode available are shown below (selectable from dropdown menu):
   - Disable power: motor inertia stop.
   - Ramp controlled stop and then disable power.
   - Ramp controlled stop keeping motor in standstill condition at power on.
   - Limit torque stop, setting desired torque limit.
4. *Digital Input:* drive digital input setting in Modbus RTU operation mode. For any other information about digital input functions, please see *"6.08.1 Digital I/O functions" pag. 64.*
   - *Filter Input*: input 1ST order filter parameters, in ms unit.
5. *Factors:* multiplier factors associated with input reference in order to modify scale resolution. Please see *"6.05 Factors" pag. 57*.
6. *Position Setting:* maximum admitted position error and maximum admitted recovery time setting; beyond these values drive provides an error/alarm condition.
7. *Position*: setting for all parameters related to desired position control between single target positioner, analog positioner, cyclic/acyclic table selection or via digital input or via input-start up to 64 target. For further information, please see *"6.09 Drive References" pag. 66* and *"6.19 Position control: positioner mode" pag. 86*.
   - *Pos Parameter:* profile setting and position procedure setting, software positive and negative limits and Homing offset.
   - *Position Jog:* JOG setting.
   - *Home Position:* HOMING procedures and parameters.
   - *Pos. - Input X:* index stop, at relative position, when event happens on INPUT X of drive I/O connector.
8. *Main Speed:* speed control and main speed reference setting between analog, inside or frequency. For further information please see *"6.09 Drive References" pag. 66*.
   - *Aux Speed*: auxiliary speed reference setting between analog, inside or torque limit.
   - *Ramps*: acceleration and deceleration ramp managment; linear ramp or S ramp (JERK parameter).

9. *GearBox:* gearbox axis rate management and engage and disengage settings; input type can be selected between *CHA/B*, *CW/CCW*, *Pulse/Direction* input reference. For turther information please see *"6.09 Drive References" pag. 66* and *"6.18 Position control: electronic gearbox mode" pag. 84*.
   - *Engaging:* engaging phase parameter set.
   - *Disengaging:* disengaging phase parameter set.
   - *Home position:* HOMING procedures and parameters.
   - *Gearbox JOG:* JOG setting.
10. *Torque:* torque control setting and input reference setting between analog and inside. For further information please see *"6.09 Drive References" pag. 66*.
11. *Electronic Cam:* Cam table and all parameter setting. For further information, please see *"6.09 Drive References" pag. 66* and *"6.20 Position control: electronic cam mode" pag. 88*.
   - *Sync/Shift:* isync parameter set and master/slave position shift setting.
   - *Data Engaging:* engaging phase parameter set.
   - *Data Disengaging:* disengaging phase parameter set.
   - *Home position:* HOMING procedures and parameters.
   - *Cam JOG:* JOG setting.
12. *Press:* pressure reference accuracy setting and fullscale setting for speed and pressure reference and for pressure transducer. For further information please see *"6.09 Drive References" pag. 66*. e *"6.21 Pressure control" pag. 90*.
   - *Setting:* safety pressure threshold setting, beyond which the drive introduces set speed limit. Speed variation is managed with ramp.
   - *Limit:* current and negative speed limit setting.
   - *Alarm mode:* overpressure and underpressure threshold setting and enabling.
   - *Pressure Reg.:* pressure ring regulators setting.
   - *Ramps:* pressure and speed ramps setting and enabling.
   - *Output:* analog output fullscale setting and output setting for pressure reached condition related to pressure and time window parameter.

NOTES:

- Drive position, speed and acceleration reference units depends on motor type between rotary and linear or tubular. For further information, please see *"6.05 Factors" pag. 57*.
- Digital output are manageble also via fieldbus parameter.
- To set all parameters via Caliper, *'Local Controll via Caliper'* key must be enabled. Comunication with Master controller is cut off.
- For further information about Modbus RTU protocol, please see related fieldbus user guide, downloadable from enterprise web site:

www.hdtlovato.com

6.03.4.c Canopen® operation mode: Canopen CIA301 and Canopen 402 item

Control type and state machine in picture:

- *Position Mode*
- *Velocity Mode*
- *Profile Velocity Mode*
- *Profile Torque Mode*
- *Homing Mode*
- *Interpolated Position Mode*
- *Cyclic Sync Position Mode*
- *Cyclic Sync Velocity Mode*
- *Cyclic Sync Torque Mode*
- *Touch Probe*
- *Electronic Gear*

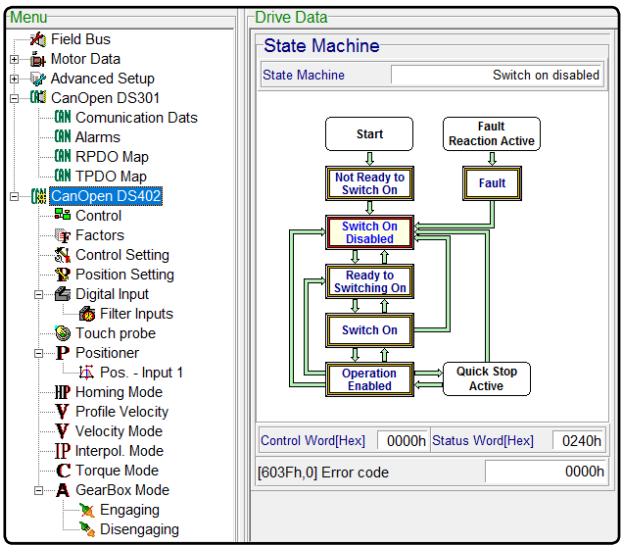

During fieldbus operation mode, Caliper software shows all Canopen parameter addresses, nearby the parameter. Same Canopen protocol implemented inside DGFox60 EVO drive is è compatible with all other H.D.T. drive families that support it.

Canopen CIA301 sub-menu items are listed below:

1. *Comunication Data:* guard time setting and parameters saving in EEPROM (according to Canopen® standards).
2. *Alarms:* alarms setting and erasing.
3. *RPDO MAP:* RPDO map visualization.
4. *TPDO MAP:* TPDO map visualization.

Canopen CIA402 sub-menu items are listed below:

1. *Control:* Canopen® Control Word and Status Word informations.
2. *Factors:* multiplier factors associated with input reference in order to modify scale resolution.
3. *Control setting*: Stop mode management during Fault Reaction and HALT conditions. For further information, please see *"6.04 Emergency stop functions" pag. 55*. Stop mode available are shown below (selectable from dropdown menu):
   - Disable power: motor inertia stop.
   - Ramp controlled stop and then disable power.
   - Ramp controlled stop keeping motor in standstill condition at power on.
   - Limit torque stop, setting desired torque limit.
4. *Position Setting:* maximum admitted position error and maximum admitted recovery time setting; beyond these values drive provides an error/alarm condition.
5. *Digital Input:* drive digital input setting in Canopen operation mode. For any other information about digital input functions, please see *"6.08.1 Digital I/O functions" pag. 64.*
   - *Filter Input*: input 1ST order filter parameters, in ms unit.
6. *Touch Probe:* parameters for Touch Probe input setting. It's possible to see Touch Probe status word inside Drive Data window.
7. *Positioner:* ramp topology and speed/position targets setting; position with its error visualization during operation.
   - *Pos. - Input X:* index stop, at relative position, when event happens on INPUT X of drive I/O connector.
8. *Homing Mode:* HOMING mode setting; zero search speed and switch search speed with acceleration parameter.
9. *Profile Velocity:* point to point speed targets setting; ramps and speed error window with timeout; speed visualization during operation.

10. *Velocity Mode:* speed reference and ramp setting; speed visualization during operation.
11. *Interpol. Mode:* interpolator mode parameter visualization.
12. *Torque Mode:* profile torque and torque reference setting; torque value visualization during operation.
13. *GearBox:* gearbox axis rate management and engage and disengage settings; input type can be selected between *CHA/B*, *CW/CCW*, *Pulse/Direction* input reference. For further information please see *"6.09 Drive References" pag. 66* and *"6.18 Position control: electronic gearbox mode" pag. 84*:
    - *Engaging:* engaging phase parameter set.
    - *Disengaging:* disengaging phase parameter set.
14. *Press:* pressure reference accuracy setting and fullscale setting for speed and pressure reference and for pressure transducer. For further information please see *"6.09 Drive References" pag. 66*. e *"6.21 Pressure control" pag. 90*.
    - *Setting:* safety pressure threshold setting, beyond which the drive introduces set speed limit. Speed variation is managed with ramp.
    - *Limit:* current and negative speed limit setting.
    - *Alarm mode:* overpressure and underpressure threshold setting and enabling.
    - *Pressure Reg.:* pressure ring regulators setting.
    - *Ramps:* pressure and speed ramps setting and enabling.
    - *Output:* analog output fullscale setting and output setting for pressure reached condition related to pressure and time window parameter.

NOTES:

- Drive position, speed and acceleration reference units depends on motor type between rotary and linear or tubular. For further information, please see *"6.05 Factors" pag. 57*.
- Digital output are manageble also via fieldbus parameter.
- To set all parameters via Caliper, *'Local Controll via Caliper'* key must be enabled. Comunication with Master controller is cut off.
- For further information about Canopen protocol, please see related fieldbus user guide, downloadable from enterprise web site:

www.hdtlovato.com

6.03.4.d Ethercat operation mode: Ethercat item

Control type and state machine in picture:

- *Position Mode*
- *Velocity Mode*
- *Profile Velocity Mode*
- *Profile Torque Mode*
- *Homing Mode*
- *Interpolated Position Mode*
- *Cyclic Sync Position Mode*
- *Cyclic Sync Velocity Mode*
- *Cyclic Sync Torque Mode*
- *Touch Probe*
- *Electronic Gear*

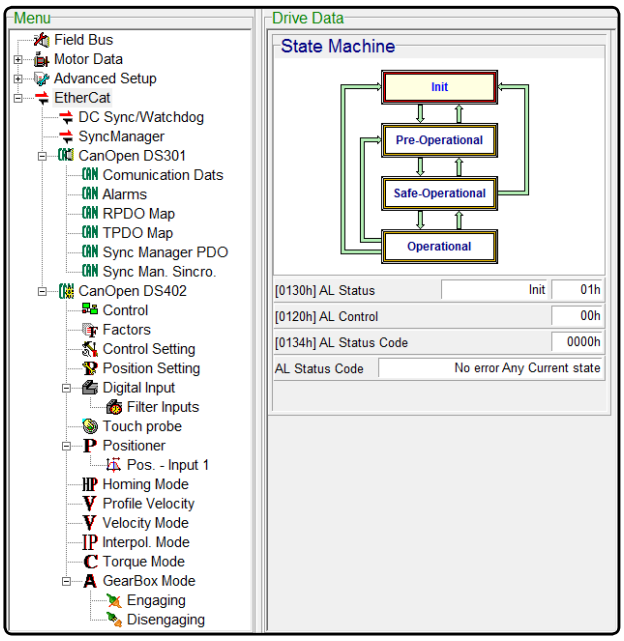

During fieldbus operation mode, Caliper software shows all Canopen (index and subindex) parameter addresses, nearby the parameter.

Same Ethercat CoE protocol implemented inside DGFox60 EVO drive is è compatible with all other H.D.T. drive families that support it.

Ethercat sub-menu items are listed below:

1. *DC Sync/Watchdog:* syncronization type set view.
2. *SyncManager:* alarm setting and erasing.
3. *CanOpen CIA301:*
   - *Comunication Data:* guard time setting and parameters saving in EEPROM (according to Canopen® standards).
   - *Alarms:* alarms setting and erasing.
   - *RPDO MAP:* RPDO map visualization.
   - *TPDO MAP:* TPDO map visualization.
   - *Sync Manager PDO:* PDO map for sync manager operation.
   - *Sync Man Sinchro:* all parameter related to syncronization.
4. *CanOpen CIA402: see* *"6.03.4.c Canopen® operation mode: Canopen CIA301 and Canopen 402 item" pag. 50*

NOTES:

- Drive position, speed and acceleration reference units depends on motor type between rotary and linear or tubular. For further information, please see *"6.05 Factors" pag. 57*.
- Digital output are manageble also via fieldbus parameter.
- To set all parameters via Caliper, *'Local Controll via Caliper'* key must be enabled. Comunication with Master controller is cut off.
- For further information about Ethercat CoE protocol, please see related fieldbus user guide, downloadable from enterprise web site:

www.hdtlovato.com

6.03.4.e Profinet RT operation mode: voce Profinet e ProfiDrive

Control type and state machine in picture:

- *Speed control (AC1)*
- *Position control (AC3, program mode and manual positioner)*

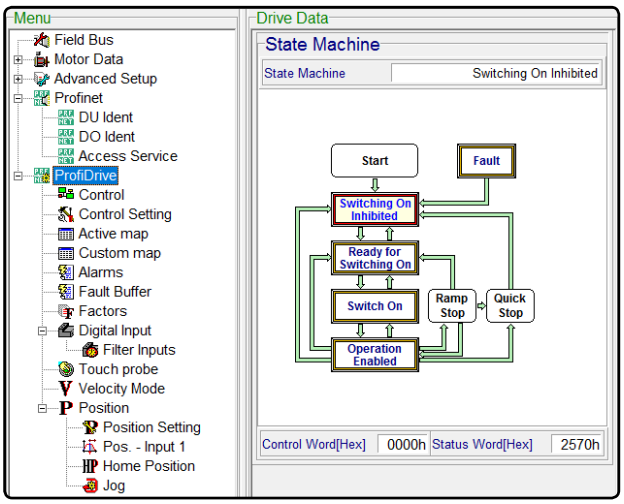

During fieldbus operation mode, Caliper software shows all Profinet (PNU index and sub-index) parameter addresses, nearby the parameter.

Same Profinet RT Profidrive protocol implemented inside DGFox60 EVO drive is è compatible with all other H.D.T. drive families that support it.

Profinet sub-menu items are listed below:

1. *DU Ident:* protocol PNU parameter useful to identify Drive Unit.
2. *DO Ident:* protocol PNU parameter useful to identify Data Object.
3. *Access Service:* identification for *Base mode parameter Access* of Profinet protocol.

Profidrive sub-menu items are listed below:

1. *Control:* Profinet Profidrive Control Word and Status Word informations.
2. *Control setting*: Stop mode management during Fault Reaction, HALT conditions and comunication timeout. For further information, please see *"6.04 Emergency stop functions" pag. 55*. Stop mode available are shown below (selectable from dropdown menu):
   - Disable power: motor inertia stop.
   - Ramp controlled stop and then disable power.
   - Limit torque stop, setting desired torque limit.
3. *Active map:* active cyclic telegram structure and its number is displayed.
4. *Custom map:* set-point, misures and other available parameters setting.
5. *Allarms*: buffer memory for drive alarm event.
6. *Fault buffer*: Profidrive buffer memory for drive alarm event.
7. *Factors:* multiplier factors associated with input reference in order to modify scale resolution.
8. *Digital Input:* drive digital input setting in Profinet operation mode. For any other information about digital input functions, please see *"6.08.1 Digital I/O functions" pag. 64.*
   - *Filter Input*: input 1ST order filter parameters, in ms unit.
9. *Touch Probe:* parameters for Touch Probe input setting. It's possible to see Touch Probe status word inside Drive Data window.
10. *Velocity Mode:* speed reference and ramp setting; speed visualization during operation.
11. *Position*: setting for all parameters related to desired position control between manual positioner (single target) or program mode via 64 target parameters.
    - *Pos Parameter:* profile setting and position procedure setting, software positive and negative limits and Homing offset.
    - *Position Jog:* JOG setting.
    - *Home Position:* HOMING procedures and parameters.
    - *Pos. - Input X:* index stop, at relative position, when event happens on INPUT X of drive I/O connector.

12. *Press:* pressure reference accuracy setting and fullscale setting for speed and pressure reference and for pressure transducer. For further information please see *"6.09 Drive References" pag. 66*. e *"6.21 Pressure control" pag. 90*.
    - *Setting:* safety pressure threshold setting, beyond which the drive introduces set speed limit. Speed variation is managed with ramp.
    - *Limit:* current and negative speed limit setting.
    - *Alarm mode:* overpressure and underpressure threshold setting and enabling.
    - *Pressure Reg.:* pressure ring regulators setting.
    - *Ramps:* pressure and speed ramps setting and enabling.
    - *Output:* analog output fullscale setting and output setting for pressure reached condition related to pressure and time window parameter.

NOTES:

- Drive position, speed and acceleration reference units depends on motor type between rotary and linear or tubular. For further information, please see *"6.05 Factors" pag. 57*.
- Digital output are manageble also via fieldbus parameter.
- To set all parameters via Caliper, *'Local Controll via Caliper'* key must be enabled. Comunication with Master controller is cut off.
- For further information about Profinet RT Profidrive protocol, please see related fieldbus user guide, downloadable from enterprise web site:

www.hdtlovato.com

6.04 Emergency stop functions

⚠ In order to perform correctly the emergency stop functions, it's mandatory that +24V for logic supply is available untill the procedure is completed.

For managing the emergency stop, drive provides some features that can change the operating status. Function are shown below:

1. FAULT REACTION function
2. HALT function

Drive operating status are shown below:

- *SWITCH-OFF status*: drive does not provide current to motor and Drive OK or Fault condition is shown. This status is reachable during operation when emergency stop procedure is active.
- *SWITCH-ON status*: drive provides current to motor in standstill only if Drive OK or warning condition is active. This status is reachable during operation when emergency stop procedure is active.
- *OPERATION ENABLED status*: drive follows speed, torque or position reference, related to desired control topology only if Drive OK or warning condition is active.

Drive operating conditions are shown below:

- *DRIVE OK or FAULT conditions*: drive provides high active output for DRIVE OK condition when no alarms occured. If an alarm occurs, drive goes into FAULT condition and output is low.
- *WARNING condition*: some alarms allow the drive to enter the WARNING condition where motor control is available but only with limit performance or simply showing that an unusual situation is occured. To further information about alarms that cause warning condition, please see *"Ch. 7 Drive status and diagnostics" pag. 101*.

Emergency stop function during Modbus operation mode is shown below:

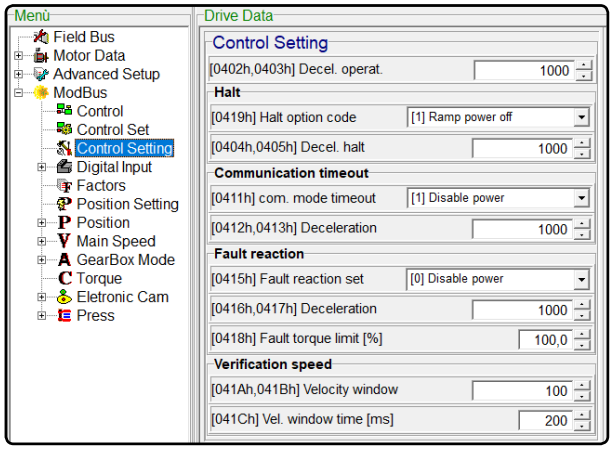

6.04.1 FAULT REACTION function

With the FAULT REACTION function is possible to set drive management when an alarm occures.

To further information about alarms that allow fault reaction function, please see *"Ch. 7 Drive status and diagnostics" pag. 101*.

Settings for this function are shown below:

- Inertia stop: drive goes immediatly into *SWITCH-OFF* status disabling power to motor.
- Ramp controlled stop, setting related ramp parameter, then drive goes into *SWITCH-OFF* status disabling power to motor.
- Limit torque stop, setting related torque limit parameter then drive goes into *SWITCH-OFF* status disabling power to motor.

6.04.2 HALT function

HALT function is achieveable via digital input or via fieldbus operation mode and it's available only when *DRIVE OK* (o *WARNING*) condition is active.

Settings for this function are shown below:

- Inertia stop: drive goes immediatly into *SWITCH-OFF* status disabling power to motor.
- Ramp controlled stop, setting related ramp parameter, then drive goes into *SWITCH-OFF* status disabling power to motor.
- Ramp controlled stop, setting related ramp parameter, then drive goes into *SWITCH-ON* status providing current to motor in standstill.
- Limit torque stop, setting related torque limit parameter then drive goes into *SWITCH-OFF* status disabling power to motor.

During fieldbus operation mode, in addition to HALT, other emergency stop functions are available managing them via fieldbus that allow to set drive behaviour during particular operating conditions.

These function are shown below:

- QUICK STOP, set via fieldbus control word, with slow and quick ramp, and managing the SWITCH-ON o SWITCH OFF status.
- COMUNICATION TIMOUT for managing the emergency stop when fieldbus comunication timeout occures.

Some settings are not available depending on operation mode.

For further information about fieldbus emergency stop, please see related manuals available at enterprise website:

www.hdtlovato.com

6.05 Factors

To ensure a correct operation for entire application, FACTORS calculation procedure must be performed. This calculation is automatic and must be started via Caliper software whenever position, speed and acceleration parameter units, that drive will receive as reference, will be changed.

Factors:

- let thew drive to know input reference topology (position, speed and acceleration units), that it will receive depending on operation mode.
- depend on chosen units and a correct value must be set at any changing in order to use drive correctly.

6.05.1 Factors calculation procedure

Factors set via Caliper software is shown below (the picture shows rotary motor, for example):

1. choose between base units or custom application units or custom label units defined by user:
   - *1a - Base units:* reffered to motor shaft, driven by drive, can be selected by a drop-down menu related to position, speed and acceleration parameters.
   - *1b - Custom Application:* only when units depends on application (*Custom Application*), it's necessary to set it in the *Application* submenu of *Drive Data* window; please see *"6.05.2 Custom Application" pag. 58*.
   - *1c - Custom Label:* only when units depends on a desired label (*Custom Label*), it's necessary to set it in the *Application* submenu of *Drive Data* window; please see *"6.05.3 Custom Label" pag. 59*.
2. choose polarity for position and speed reference.
3. automatic calculate for factors.

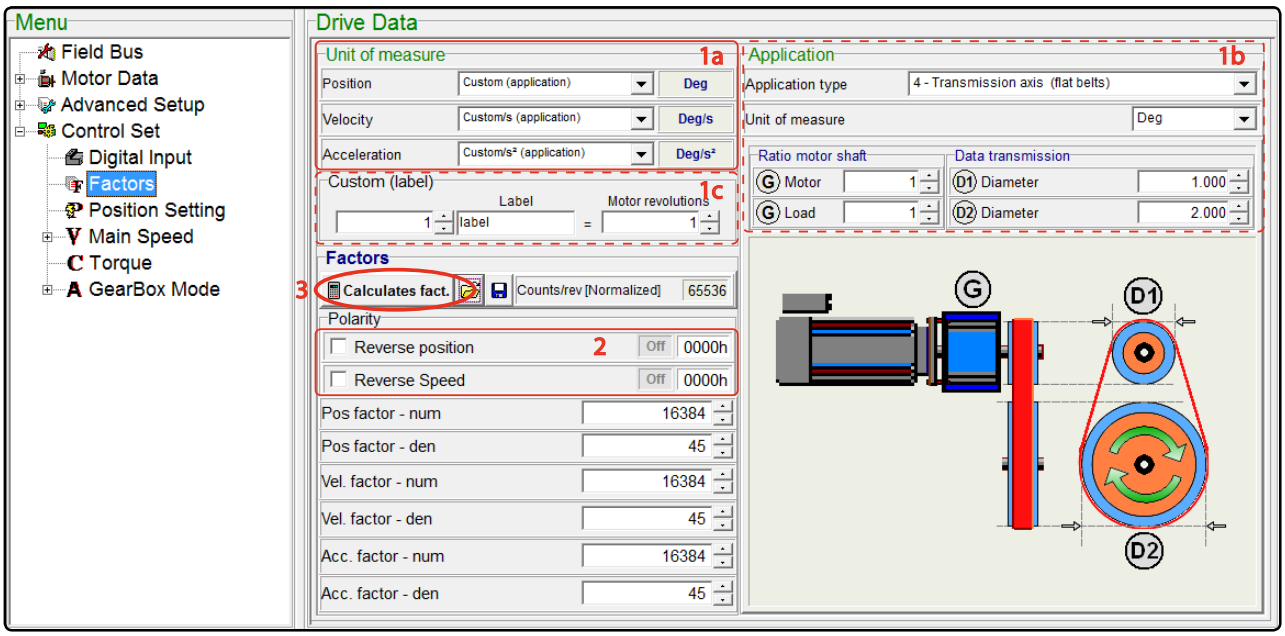

NOTES:

- It's recommended to use the Custom Label only after be ensured that the desired units are not implemented as main units, in order to avoid any errors in factors.
- It's recommended to use the Custom Application, if position, speed and acceleration references, provided to drive, are reffered to load and not to motor shaft (so downstream any reducers or rack).
- Graphics allow to see the chosen Custom Application.
- Calculated factors can be save/load from the used PC directory.

Main units supported by drive are listed below:

	Angular units	Linear units	Standard units
Position	radians, deg	cm, mm, µm, nm, inches, mils	counts
Speed	radians/s, deg/s	cm/s, mm/s, µm/s, nm/s, inches/s, mils/s	counts/s, RPM, RPS
Acceleration	radians/s^2, deg/s^2	cm/s^2, mm/s^2, µm/s^2, nm/s^2, inches/s^2, mils/s^2	counts/s^2, RPM/s, RPS/s

NOTES:

- There are other units, in the same drop-down menu, that allow to set tenths, cents and thousandth of main units.

6.05.2 Custom Application

» In case of rotary motor, supported Custom Application can be selected by a drop-down menu and they are listed below:

1. *Disk axis (angular measurement)*: application with angular units reffered directy to a load represented by a rotary disk downstream any reducer. Set parameters are:
   - units
   - reducer ratio
2. *Disk axis (angular measurement)*: application with linear units reffered directy to a load represented by a rotary disk downstream any reducer. Set parameters are:
   - units
   - reducer ratio
   - disk diameter
3. *Axis conveyor belt (flat belt)*: application with linear units reffered directy to a load represented by an axis conveyor belt downstream any reducer. Set parameters are:
   - units
   - reducer ratio
   - dragged disk diameter
4. *Axis conveyor belt (toothed belt)*: application with linear units reffered directy to a load represented by an axis conveyor belt downstream any reducer. Set parameters are:
   - units
   - reducer ratio
   - tooth number e tooth pitch
5. *Transmission axis (flat belt)*: application with linear units reffered directy to a load represented by a transmission axis downstream any reducer. Set parameters are:
   - units
   - reducer ratio
   - disks diameters
6. *Transmission axis (toothed belt)*: application with linear units reffered directy to a load represented by a transmission axis downstream any reducer. Set parameters are:
   - units
   - reducer ratio
   - toohtd disks number
7. *Axis with worm*: application with linear units reffered directy to a load represented by an axis with worm downstream any reducer. Set parameters are:
   - units
   - reducer ratio
   - screw pitch

8. *Axis with hollow shaft motor*: application with linear units reffered directy to a load represented by an axis with an hollow shaft motor. Set parameters are:
   - units
   - screw pitch

» In case of linear or tubular motor, the Custom Application is unique, and the calculation for Factors is equal to that described for rotary motor:

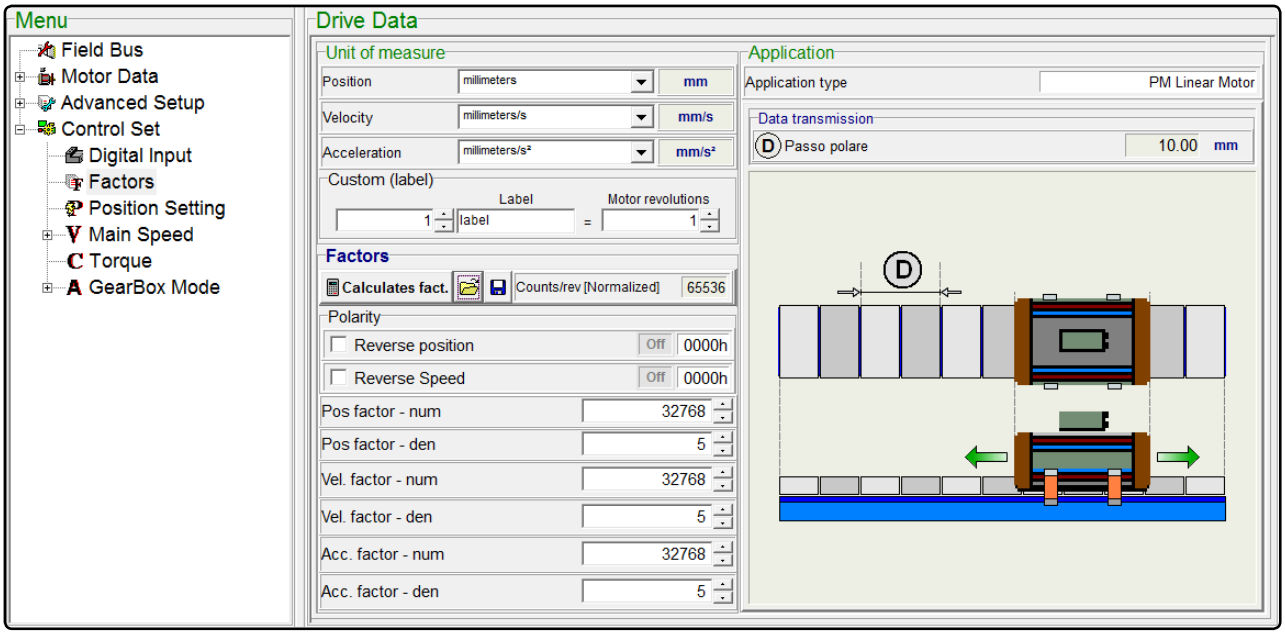

NOTES:

- Some units, as *nm*, are not implemented in linear motor application; by the way, it can be created with Custom Label.
- Graphics allow to see the chosen Custom Application.
- Calculated factors can be save/load from the used PC directory.

6.05.3 Custom Label

Custom Label allows user to set custom units related to a specified application.

To define units, it's allow to set:

- a ratio between number of desired revolutions to perform in order to reach target of specified application (in case of rotary motor).
- a ratio between number of desired pole pitch to perform in order to reach target of specified application (in case of linear or tubular motor).

This means that target quota, that user provides to drive, is equal to that set as number of revolution or number of pole pitch.

An example of Custom Label setting is shown in the picture below:

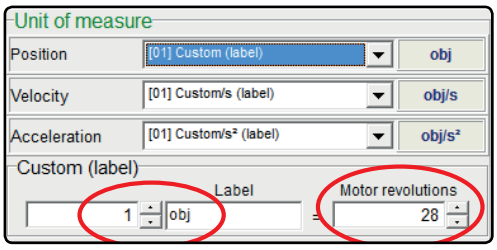

Setting, as target ('obj'), value '1' and, as number of revolutions, value '28', drive will perform 28 revolutions when user provides it , as target position, value '1'.

NOTES:

- Custom Label settable parameters are 16bit (resolution at 65535).

6.06 Rotary switches and dip switch

Rotary switches and dip switch function inside drive allow *Comunication Boudrate* and *Fieldbus Node ID address* harware setting.

Contrary to Caliper software setting, this hardware feature imposes the following limits:

- Maximun node address number up to 99.
- Up to 4 different trasmission speed (separatly for Modbus RTU and Canopen®).

Rotary switches and dip switch can be enable by Caliper software after Canopen® or Modbus RTU selection, as shown in the image below:

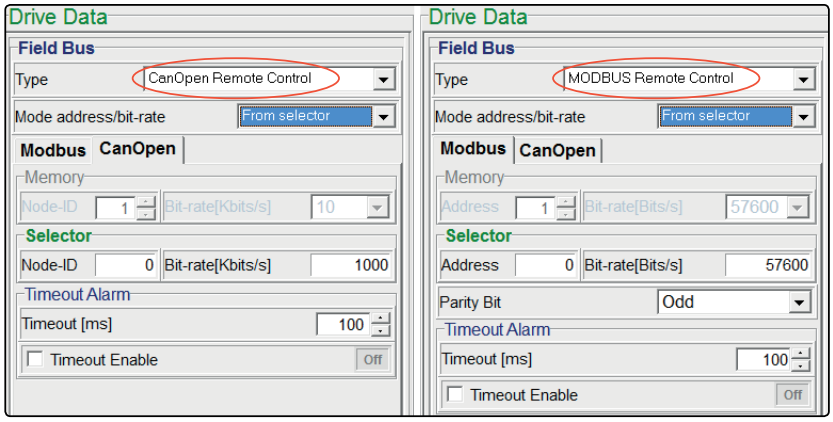

» **Rotary switches** have a decimal configuration and, clockwise rotated, allow to increase units and tens for node address value from 0 to 9; so 99 nodes are configurable.

Rotary switch 0-position is a NO meaning setting. If the total desired node number is grater than 99, please set address ID from Caliper software up to 127 nodes in Canopen® operation and 247 nodes in Modbus RTU operation.

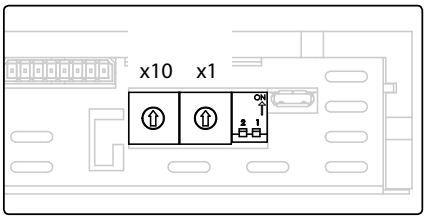

» **Dip switch** is in enable condition (ON-position) when the switch is pushed low. Comunication Baudrate setting (pin 1 and 2) is shown below:

DIP-SWITCH			Baudrate Canopen®	Baudrate Modbus RTU
pin 1	*pin 2*			
OFF	OFF		250KBit/s	9.6KBit/s
ON	OFF		500KBit/s	19.2KBit/s
OFF	ON		800KBit/s	38.4KBit/s
ON	ON		1000KBit/s	57.6KBit/s

6.07 Motor autophasing

Autophasing function allows drive to identify connected motor poles number and incremental encoder offset (all data are visible in 'Motor Data' item); ensure to perform autophasing procedure if a third parts motor is used, in order to grant a correct drive functionality.

If drive manages motor brake, its disengage is performed during autophasing function. In case of vertical axis load, please use an oppropriate external mechanic brake esterno and separate rotor from load. In the end of autophasing operation, motor brake will engage.

Rotor MUST be free to rotate during autophasing function.

Please set correct used motor encoder pulse number and motor rated current before performing autophasing.

Drive can perform autophasing also without HALL sensors in order to identify only connected motor poles number.

In the launching window, a motor current confirmation message appears and lets to enter correct data; also a free rotor message appears, as shown in the image below:

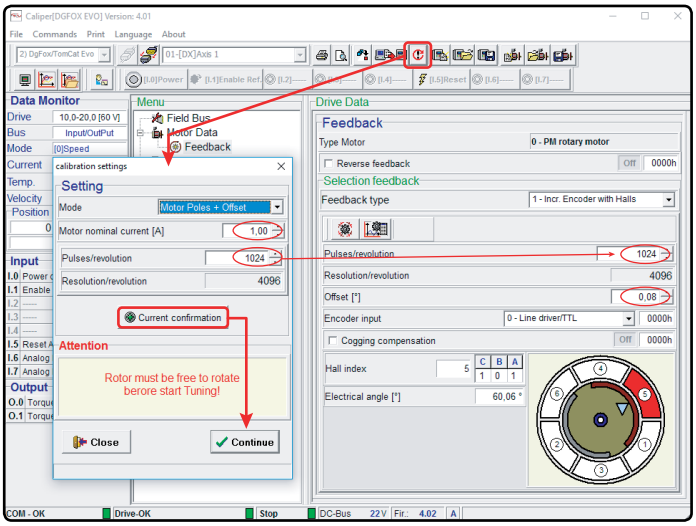

NOTES:

- Modifing current data and encoder pulse number before performing autophasing, it lets to auto update related into *Motor Data* item, as shown in previous image.
- H.D.T. motors are normally phased at drive default value, so, during first start up, it is not necessary to perform autophasing.

Caliper software shows some information during autophasing operation, as shown in the image below:

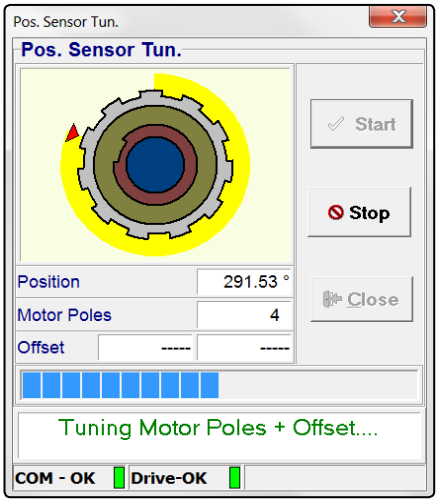

During this operation, motor performs one complete turn at low speed, identifing total motor poles number; the graphic window shows istantaneous information about rotor position within turn.

Press Start to perform autophasing.

Autophasing can be stopped in any tyme pressing Stop key. An autophasing operation must have been complete at least, in order to ensure a drive correct operation with connected motor.

If during autophasing motor runs in counterclockwise, (shaft side view), please invert two motor phases of cable connection.

In the end, Caliper software will update motor poles number into 'Motor Data' item and will automatically send data to drive.

6.08 Digital I/O

Digital input (also analog input used as digital input) and output ports are totally configurable, so they are not linked to hardware input position, exception for 2 input capture functions, as Touch Probe.

To learn more about digital I/O functions according to choosen operation mode, please see *"6.08.1 Digital I/O functions" pag. 64*, and for information aboutI/O topology, please see *"5.11 Not insulated input" pag. 35* and *"5.10 Optoinsulated digital output: NPN and PNP" pag. 35*.

Please remember that 'Digital Input' sub item is nested in Menu item releated to desired operation mode; for example, a kind of useful configuration for digital input functions, with related settings, during speed control in I/O operation mode is shown below:

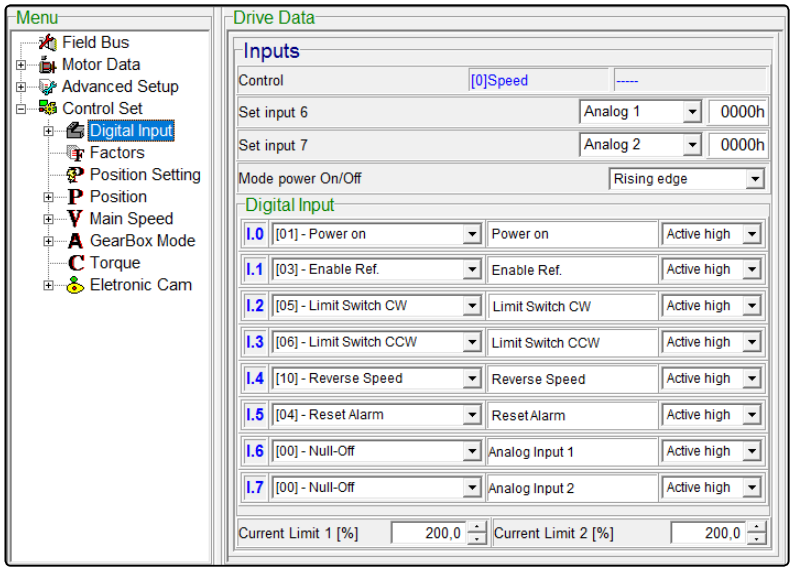

Setting into window is shown below:

- setting input 6 and 7 as analog or digital input.
- setting Power ON/OFF activation type between Level or Edge of selected input signal.
- setting input function from dropdown menu and desired logic state.

Digital input functions are listed below:

1. ***Power ON*** or ***Switch ON***: motor locked in torque standstill condition command.
2. ***Power ON/Reset***: reset alarms and torque standstill condition joint command.
3. ***Power/Operat.***: torque standstill condition and reference enabled joint command.
4. ***Power/Operat./ Reset***: reset + torque standstill + reference enabled joint command.
5. ***Enable Reference*** o ***Enable Operation***: reference enabled command.
6. ***Start Reference***: Start position command.
7. ***Halt***: Halt command.
8. ***Position Abs./Rel.***: target conversion between absolute and relative and viceversa.
9. ***Reset Alarms*** or ***Fault Reset***: drive alarms reset command.
10. ***Limit Switch CW*** and ***Limit Switch CCW***: input for clockwise (CW) and counterclockwise limit switch (CCW).
11. ***Home Switch***: input for Home switch.
12. ***Current limit 1*** and ***Current limit 2***: input for 1ST and 2ND torque limit at specified percentage value.
13. ***Reverse Speed***: reverse speed command.
14. ***Home Position***: start Home Position procedure command.
15. ***JOG+*** and ***JOG-***: speed JOG command.
16. ***Selection-Start***: target table selection input and start per input-start position control.
17. ***Reference Select(0-5)***: target table selection input via Modbus operation mode.
18. ***Reset Index***: cyclic positioner index reset.
19. ***Position on Input X***: index stop, at relative position, when event happens on defined Input.
20. ***Measure position on In X***: start/stop position measurement on defined input.
21. ***Selection Cam (0-2)***: electronic cam table selection input.
22. ***Input Sync Cam***: electronic cam sync input.
23. ***Input Sync Slave***: electronic cam slave module sync input.

24. ***Position Phase Shift***: input for performing axis posizion phase shift.
25. ***Velocity Shift +*** and ***Velocity Shift -***: input for performing axis speed phase shift.
26. ***Touch Probe 1*** and ***Touch Probe 2***: Touch Probe 1 and 2 function input.

Output can be set into *Advanced Setup* as shown below:

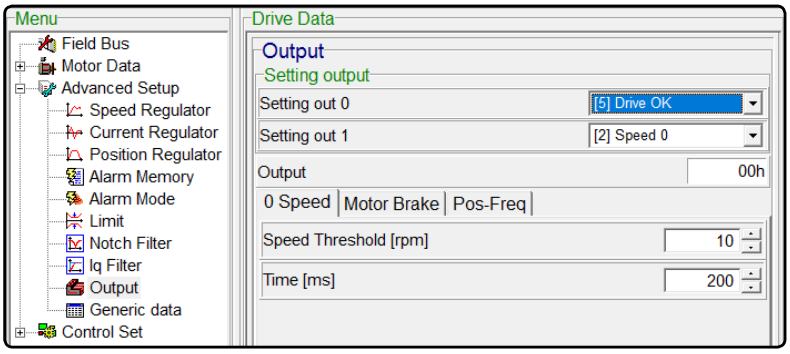

Output is enabled for each operation mode supported by drive.

Drive Data window lets choosing output port function and shows some function parameter.

In order to enable function, please select it in the drop-down menu into *Drive Data* item.

Output functions are listed below:

1. ***Torque limit***: if drive provides rated torque or reaches torque limit set as reference, output will switched to an high state value.
2. ***I2T Alarm***: if drive identifies a drive or motor I2T alarm condition, output will switched to an high state value.
3. ***Speed 0***: if drive identifies a Zero Speed condition, output will switched to an high state value. Speed value and timeout, beyond that it's necessary to send alarm, can be set in *Drive Data* item.
4. ***Target reached***: output will switched to an high state value if drive identifies one of the following reached target condition: target position reached, home position executed, cam completed and pressure reached.
5. ***Mot. Brake***: motor brake management. For further details, please see *"6.11 Motor brake" pag. 69*.
6. ***Drive OK***: high active logic signal for *Drive OK* status; output is disabled if any alarms occur.
7. ***Pos-Freq. Out***: this output provides a squared wave whose frequency is equal to a divider, settable with a power of two, of motor position in turn (counts). Maximum allowable frequency for output is 2.5kHz so for using correctly thi function, please follow the formula shown below:

$$DIV_{MIN} = \frac{N_{RPM.V} \cdot FB_{RESOLUTION}}{3 \cdot 10^5} \qquad ENC_{OUT} = \frac{FB_{RESOLUTION}}{2 \cdot DIV}$$

where $N_{RPM.V}$ (RPM) is the maximum speed reachable by the motor in the application, $FB_{RESOLUTION}$ is the feedback resolution (it equals to encoder pulse number multiplied by 4, if incremental encoder is used, whereas it equals to resolution due to number of bit if absolute encoder is used), and DIV_{MIN} is the minimum allowable divider; so from Caliper drop-down menu, please choose an "Encoder count Divider", DIV, higher than DIV_{MIN} found value, to result in ENC_{OUT}, that is the output resolution in CPR (counts per round).

8. ***Pos Output***: available only for input-start position mode, it provides an output pulse, with time setting, when position is reached.
9. ***Homing attained***: when any homing procedure is performed, output will switched to an high state value and it will remain untill next Homing procedure call (or drive turn off).

NOTES:

- Digital output functions are available in every supported operation mode.
- Digital output are also configurable to be controlled via fieldbus parameter in order to let controller to perform custom function.

6.08.1 Digital I/O functions

Available functions, during I/O operation mode and related control type, are shown in table below:

	I/O Operation mode					
	Speed	***Torque***	***Elect. Axis***	***Position***	***Elect. Cam***	***Press***
IN 0	Power ON Power ON/Reset Enable Reference Reset Alarms Current Limit 1 Current Limit 2 Halt Reverse Speed Limit Switch CW Limit Switch CCW Home Switch	Power ON Power ON/Reset Enable Reference Reset Alarms Current Limit 1 Current Limit 2 Halt	Power ON Power ON/Reset Enable Reference Reset Alarms Current Limit 1 Current Limit 2 Halt Home position Limit Switch CW Limit Switch CCW Home Switch JOG+ JOG– Pos. Phase Shift Velocity Shift + Velocity Shift –	Power ON Power ON/Reset Enable Reference Reset Alarms Current Limit 1 Current Limit 2 Halt Home position Limit Switch CW Limit Switch CCW Home Switch JOG+ JOG– Selection-Start Position on Input X	Power ON Power ON/Reset Enable Reference Reset Alarms Current Limit 1 Current Limit 2 Halt Home position Limit Switch CW Limit Switch CCW Home Switch JOG+ JOG– Selection Cam Velocity Shift + Velocity Shift – Input Sync Cam Input Sync Slave	Power ON Power ON/Reset Enable Reference Reset Alarms Current Limit 1 Current Limit 2 Halt Limit Switch CW Limit Switch CCW
IN 1						
IN 2						
IN 3						
IN 4						
IN 5						
IN 6*						
IN 7*						
DIR	CHA - CCW - DIR	–	CHA - CCW - DIR	–	CHA - DIR	–
PULSE	CHB - CW - PULSE	–	CHB - CW - PULSE	–	CHB - PULSE	–

Available functions, during Modbus RTU operation mode and related control type, are shown in table below:

	MODBUS RTU Operation mode					
	Speed	***Torque***	***Elect. Axis***	***Position***	***Elect. Cam***	***Press***
IN 0	Switch ON Power/Operation Pow./Op./Reset Enable Operation Fault Reset Halt Meas. pos. Input X Limit Switch CW Limit Switch CCW Home Switch	Switch ON Power/Operation Pow./Op./Reset Enable Operation Fault Reset Halt Start reference Meas. pos. Input X	Switch ON Power/Operation Pow./Op./Reset Enable Operation Fault Reset Halt Meas. pos. Input X Limit Switch CW Limit Switch CCW Home Switch Start reference Home Position JOG+ JOG– Pos. Phase Shift Velocity Shift + Velocity Shift –	Switch ON Power/Operation Pow./Op./Reset Enable Operation Fault Reset Halt Meas. pos. Input X Limit Switch CW Limit Switch CCW Home Switch Start reference Home Position JOG+ JOG– Selection-Start Reference select (0-5) Position Abs./Rel Position on Input X	Switch ON Power/Operation Pow./Op./Reset Enable Operation Fault Reset Halt Meas. pos. Input X Limit Switch CW Limit Switch CCW Home Switch Start reference Home Position JOG+ JOG– Selection Cam (0-2) Velocity Shift + Velocity Shift – Input Sync Cam Input Sync Slave	Switch ON Power/Operation Pow./Op./Reset Enable Operation Fault Reset Halt Start reference Meas. pos. Input X Limit Switch CW Limit Switch CCW
IN 1						
IN 2						
IN 3						
IN 4						
IN 5						
IN 6*						
IN 7*						
DIR	CHA - CCW - DIR	–	CHA - CCW - DIR	–	CHA - DIR	–
PULSE	CHB - CW - PULSE	–	CHB - CW - PULSE	–	CHB - PULSE	–

Available functions, during Canopen, Ethercat CoE e Profinet operation mode and related control type, are shown in table below:

	Operation Mode		
	Canopen CIA402	***Ethercat CoE CIA402***	***Profinet Profidrive***
IN 0	Position on Input X - Measuring Position		
IN 1	Position on Input X - Measuring Position - Touch Probe 1 - Touch Probe 2		
IN 2	Limit Switch CW		
IN 3	Limit Switch CCW		
IN 4	Home Switch		
IN 5	Position on Input X - Measuring Position - Touch Probe 1 - Touch Probe 2		
DIR	CHA - CCW - DIR *(only for Electronic Gearbox)*		-
PULSE	CHB - CW - PULSE *(only for Electronic Gearbox)*		-

NOTES:

- Drive considers that an I/O port is activated when high level logic state is detected. For any information about logic state levels, please see *"2.04 Technical data" pag. 11*. For further information about wiring, please see *"5.10 Optoinsulated digital output: NPN and PNP" pag. 35* and *"5.11 Not insulated input" pag. 35*.
- * Input IN_6 and IN_7 are same hardware analog input; to use them as digital input, they must be enabled: single ended connection for main reference is to connect *-Ref* (pin 1) to *GND* ground (pin 3) and to connect signal to pin 2.
- Function related to Position table selection (Selection Position from 0 to 5) and Cam table selection (Selection Cam from 0 to 2) have to be set manually during Modbus RTU operation mode.
- Please, see fieldbus user guides for any other detailes related to how to manage digital I/O (logic states or activation sequences).
- Digital output functions are available in every supported operation mode.
- Digital output are also configurable to be controlled via fieldbus parameter in order to let controller to perform custom function.

6.09 Drive References

Drive acquires references, related to operation mode and control topology, from type shown below:

1. Main reference
2. Auxiliary AUX reference

Having the main analog reference a voltage range between -10V e +10V, zero condition is obtained when input voltage to drive pin port (pin 1 and 2 of J3 connector) equals to 0V. Having the auxiliary reference a voltage range between 0V e +10V, zero condition is obtained when input voltage to drive pin port (pins 3 and 4 of J3 connector) equals to 5V. For any further information about connections and about analog input topology, please see *"5.05 J3 connector: I/O and logic supply" pag. 26*, *"5.11 Not insulated input" pag. 35* e *"5.10 Optoinsulated digital output: NPN and PNP" pag. 35*.

6.09.1 Main Reference

Main reference provides following features:

- *speed control* as IN6 analog speed reference (only I/O and Modbus op. mode): pin 1-2 of J3 connector.
- *speed control* as frequency speed reference (only I/O and Modbus op. mode): pin 12 to 15 of J3 connector.
- *speed control* as target speed table selection reference (only I/O and Modbus op. mode).
- *torque control* as IN6 analog torque reference (only I/O, Modbus op. mode): pin 1-2 of J3 connector.
- *position control* as frequency position reference ('elect. gearbox' for I/O, Modbus, Canopen and Ethercat op. mode and 'electronic cam' for I/O and Modbus op. mode): pin 12 to 15 of J3 connector.
- *position control* as IN6 analog speed reference (I/O and Modbus op. mode): pin 1-2 of J3 connector, if 'single target positioner' or 'analog positioner' is used.
- *pressure control* as analog IN6 pressure transducer reading feedback: pin 1-2 of J3 connector.

Topologies are shown below:

1. **Analog**: reference is feeded from external signal, whose voltage range lies between ±10V. Drive input is a differential port (pins 1 and 2 of J3 connector).
   - *In speed control*, this signal feeds main speed reference related to settable parameters.
   - *In torque control*, this signal feeds percentage torque reference according to rated motor current data ('Nominal Current' in Motor Data item).
   - *In position control*, if 'single target positioner' or 'analog positioner' is used, this signal feeds main speed reference related to settable parameters into position sub-menu.
   - *In pressure control*, this signal feeds pressure transducer reading related to settable parameters into press sub-menu.
2. **Inside**: speed or torque reference is generated internally by drive and it's constant. By the way, it can be modified via Caliper software during operation or via fieldbus parameter.
3. **Frequency**: speed or position reference is feeded from 2 frequency signals (pins 12, 13, 14 and 15 of J3 connector) with these features:
   - PULSE - DIRECTION mode: a signal frequency provides to drive the position/speed refererce, whereas the second one provides to drive the direction signal depending on high logic signal (forward motion) or low logic signal (backwards motion).
   - EXTERNAL ENCODER CHA - CHB: external real or simulated encoder input. *It's recommended not to connect more than 2 drives on external encoder incremental channels in order to not overload it; in this case, please use a signal amplifier device every 2 drives connected.*
   - CW - CCW: a signal frequency provides to drive the position/speed refererce, whereas the second one provides to drive the 'Start' command (low logic signal). Depending on which of the two inputs receives the frequency signal, the drive controls motor in forward motion (CW) or in backwards motion (CCW).
4. **Tab-Speed**: reference is located into 64 target table with index selection via digital input or fieldbus parameters.

Analog input setting, related to a speed control, is shown in picture below:

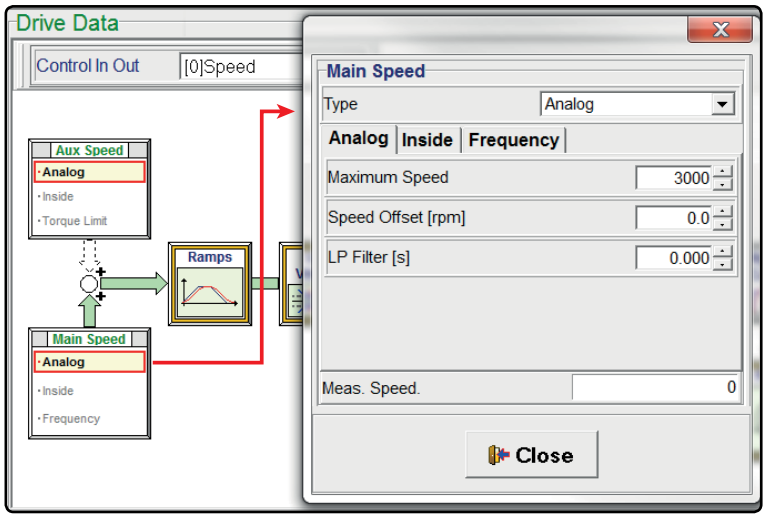

Parameters to set are:

- maximum absolute value for reachable speed (back and forth operation) when analog input voltage value matches with ±10V scale value (example: ±3000RPM).
- speed offset useful to compensate any external signal offset.
- a low pass digital filter on external signal.

Information about istantaneous measured speed appears.

6.09.2 Auxiliary Reference

Auxiliary reference AUX/IN7 provides following features:

- *speed control* as auxiliary speed reference (only I/O and Modbus op. mode).
- *speed control* as torque limit reference (only I/O and Modbus op. mode).
- *position control* as analog position reference, if 'analog positioner' is used (only I/O and Modbus op. mode).

Topologies are shown below:

1. **Analog**: reference is feeded from external signal, whose voltage range lies between 0V and +10V (pins 3 and 4 of J3 connector).
   - *In auxiliary speed control*, this signal is added to main speed reference and parameters to set are maximum reachable speed (in absolute value) when analog input voltage value matches with +10V scale value (example: +3000RPM) and with 0V scale value (example: -3000RPM).
   - *In position control*, setting minimum target position (equivalent 0V) and maximun target position (equivalent +10V) parameters, drive performs positioning between this two values following the 12 bit analog auxiliary reference range (0/+10V).
2. **Inside**: auxiliary speed reference is generated internally by drive and it's constant. By the way, it can be modified via Caliper software during operation or via fieldbus parameter.
3. **Torque limit**: reference is used in speed control as torque limit value. Reference is feeded from external signal, whose voltage range lies between 0V and +10V (pins 3 and 4 of J3 connector). Parameters to set are:
   - absolute torque value to load when analog input voltage value matches with +10V scale value (example: 100%).
   - torque offset useful to compensate any external signal offset.

Limit torque function, related to auxiliary speed control, is shown in picture below:

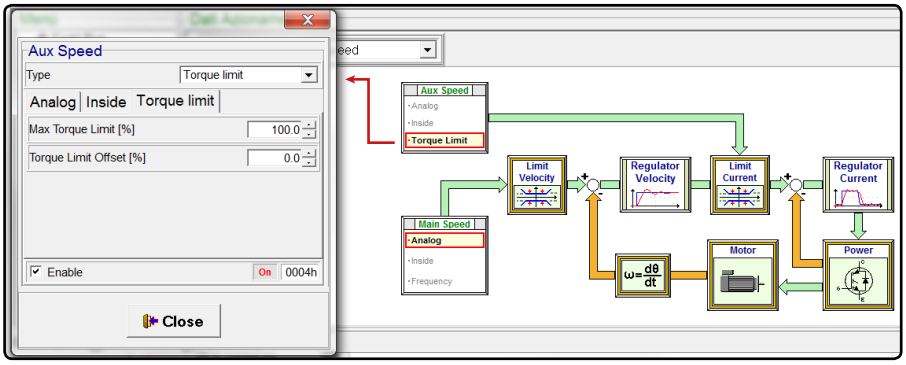

Analog input setting, related to auxiliary speed control, is shown in picture below:

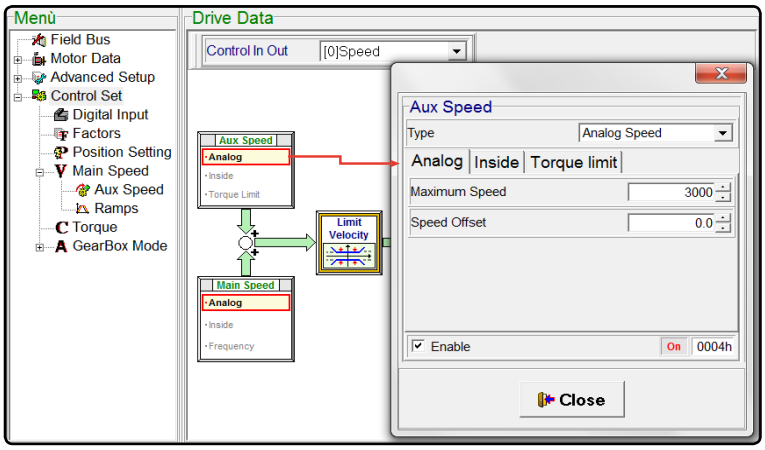

Parameters to set are:

- maximum added value for reachable speed (back and forth operation) when analog input voltage value matches with 0/+10V scale value (example: ±3000RPM).
- speed offset useful to compensate any external signal offset.

NOTES:

- please pay attention to any activated digital input set for torque limit function.

6.10 Speed ramps

Acceleration and deceleration ramps management is enabled only with speed control in any operation mode. Drive performs ramps at any reference change.

Acceleration and deceleration ramps enabling and setting are shown below:

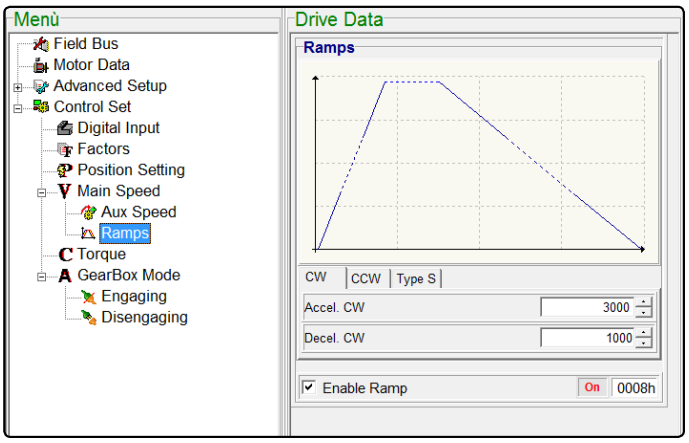

After ramps enabling, acceleration and deceleration values must be set, as RPM/s, both clockwise (CW) that counterclockwise (CCW): so, knowing $T_{RAMP\text{-}V}$ time to reach $N_{RPM\text{-}V}$ operating speed, acceleration and deceleration parameters (*RAMP-V*) are provided by following formula:

$$RAMP\text{-}V = \frac{N_{RPM\text{-}V}}{T_{RAMP\text{-}V}} \quad [\frac{RPM}{s}]$$

Another ramp type supported by drive is the S ramp (Type S) that, besides just described parameters, uses a further parameter called JERK (RPM/s^2); this last parameter, also called smooth factor, introduces another ramp coefficient related to acceleration and deceleration profile, and lets drive to smooth speed profile around reference change; knowing $T_{RAMP\text{-}A}$ time to reach *RAMP*-V parameter, acceleration and deceleration ramps (*JERK or smooth factor*) are provided by following formula:

$$JERK = \frac{RAMP.V}{T_{RAMP.A}} \quad [\frac{RPM}{s^2}]$$

Smooth factor effect on speed profile is shown below:

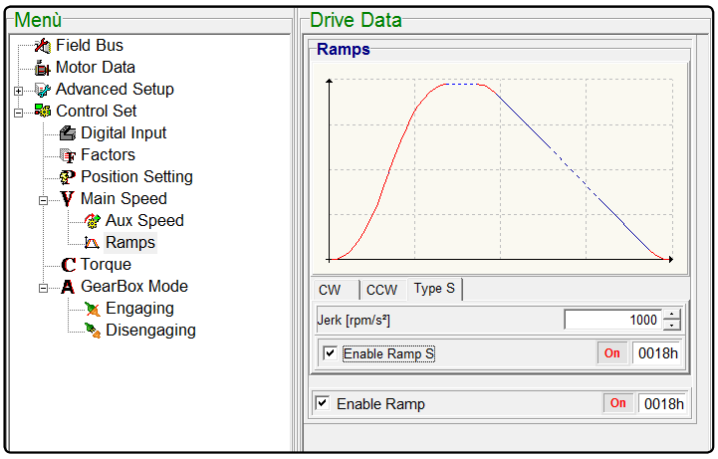

6.11 Motor brake

Motor brake function provides that drive, at any SWITCH-OFF command (load torque disabled), performs a ramp to stop load, before brake enabling and before leaving SWITCH-ON state.

*If application requires motor brake function, **do NOT use a control feedback from incremental channel only (without HALL sensors)** because, in this condition, drive needs to perform, at every SWITCH-ON command, a rotation angle, in order to align poles, more or less pronounced, depending on the rotor position in that moment.*

It's recommended NOT to connect OUT1 output directly to motor brake command contact. Please use a mechanical contact (as a relay) or any other proper mechanical/electric contact as long as OUT1 current consumption is lower than **50mA imposed by drive electrical features**.

'Time brake enable' and 'time brake disable' must be appropriate to estimated time for brake handling.

Into *Advanced Setup* item, into *Output* sub-item, output OUT1 can be set for motor brake management (please see *"6.08 Digital I/O" pag. 62* to learn about output setting), with features shown below:

1. convention used for output provides to 'disable' brake (disengage) at high logic signal and 'enable' brake (engage) at low logic signal.
2. 'time brake enable' and 'time brake disable' setting from 10 to 2000 ms.
3. 'speed brake enable' setting: it is the speed target to enable brake.
4. deceleration ramp setting, to reach speed target, at any SWITCH-OFF command (only with operating speed grater than speed target).

During engaging brake, drive provides to stop load keeping block torque, after reaching speed target, and, at this time, it provides output signal; drive holds torque until 'time brake enable' set is expired.

During disengaging brake, drive provides to keep motor rated torque/current. When brake contact is really disengage, drive provides load proper torque/current in order to hold it until 'time brake disable' set is expired. During disengaging brake, any axis movements may occur, because of mechanical brake disable time and drive

PID regulator smartness. For this reason, "Current Offset" parameter is available for pre-applying torque to motor during the brake disable time, in order to avoid axis movements when PID regulators start to operate.

To use correctly the pre-torque function, follow the instruction below:

- set "Current Offset" parameter to 0.
- disengage brake and read the current value provided by the drive to keep load.
- write the current value (with sign value) into "Current Offset" parameter.

The timing-chart for motor brake function is described in the image below:

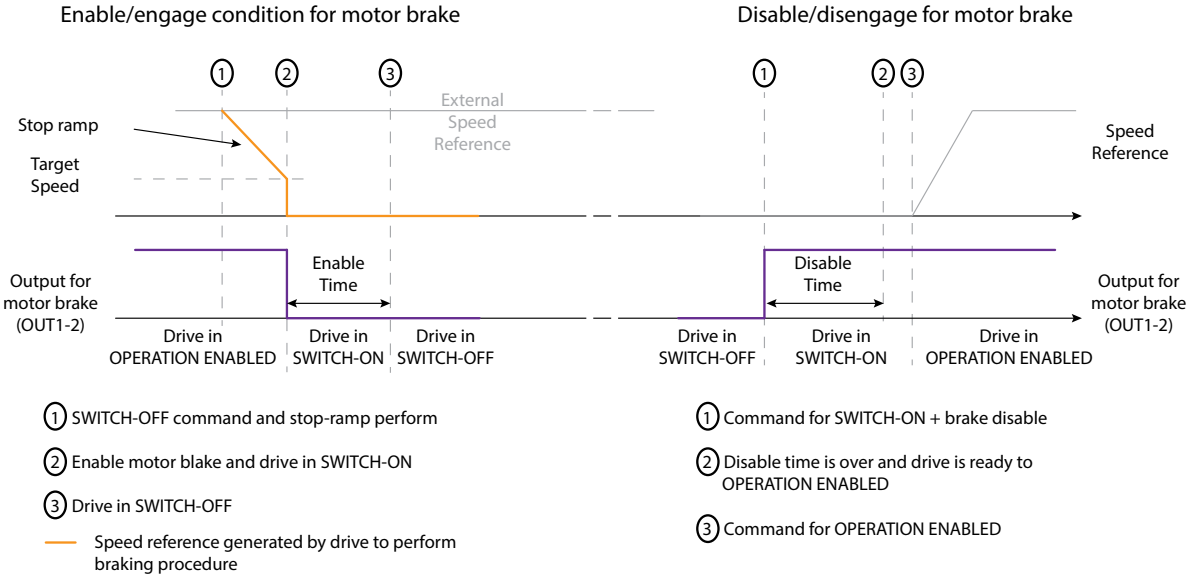

Output brake function setting and parameter described above are shown in the image below:

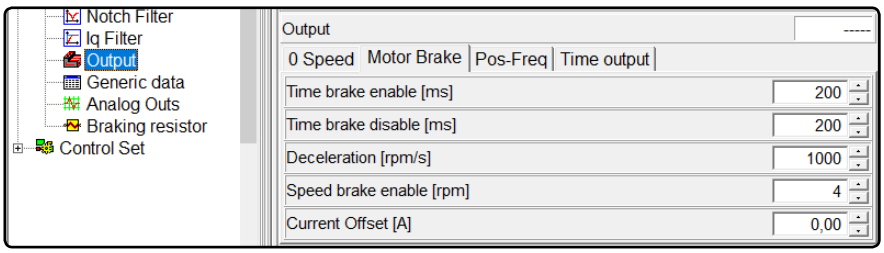

NOTES:

- Drive performs stop following speed reference, not measured speed, in order to engage motor brake also during power stage failure conditions.
- Motor brake function is not available during torque control.
- To ensure that pre-torque function works properly, it's necessary that vertical axis load should be quite constant during all machine working cycle.

6.12 Motor cogging torque compensation

Motor cogging compensation function lets to get a better accuracy during a torque control reference following.

Motor cogging mapping is valid:

- only for rotative motors.
- only for absolute encoder feedback or at least for incremental encoder with zero index (mandatory).
- only for the motor on witch the procedure was performed; in case of motor replacement or encoder rephasing, a new procedure launch is required.

Mapping procedure must be performed only via Caliper software, then the enabling and disabling function can be reached also via fieladbus operation; before starting procedure, rotor must be free to rotate, so ensure to disconnect the load.

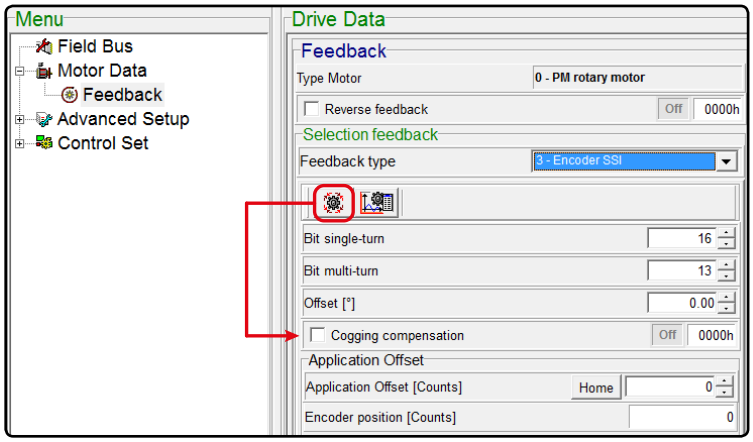

Mapping procedure is shown below:

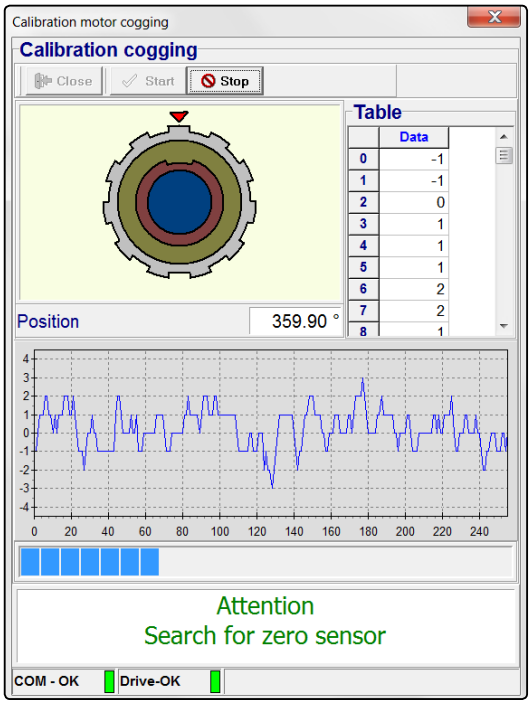

NOTES:

- Advise against using motor cogging compensation during a speed or position control.
- If motor cogging compensation is uded with incremental encoder feedback without ZERO index, procedure will be aborted.

6.13 Scope function

Available on Caliper software, Scope function allows to control drive several variables time trend. It can display up to 4 channel at a time and with a sampling rate up to 100µs.

Scope main screen consists of:

1. a **toolbar** located at the top allows to:
   - open and save in a used PC folder and stamp all display traces.
   - provide Start and Stop acquiring, Refresh data and Erase data commands.
   - configure channels to display and sampling time.
   - configure PID regulator looking at traces during operation mode.
2. a **state bar** located at the lower allows to monitor drive state and to provide information about set trigger type and about PC RAM buffer usage, to receive and trasmit via USB2.0 port.
3. a **display** allows to visualize acquired enable channel data, creating a amplitude-time graph on an adjustable time base, depending on sampling time. It allows graphic zoom by selecting the interested area with the PC mouse.
4. a **setting window** located at the right of display, divided into 3 different item, allows to:
   - enable misure cursor for timebase axis (X axis) and for amplitude axis (Y axis) and to check the realtime value.
   - define visualized variables amplitude resolution (automatic or manual setting).
   - set desired trigger topology between 'Rolling', 'Automatic' and 'One Shot'.

Scope main window is shown below, divided into three separated views for the *setting window*:

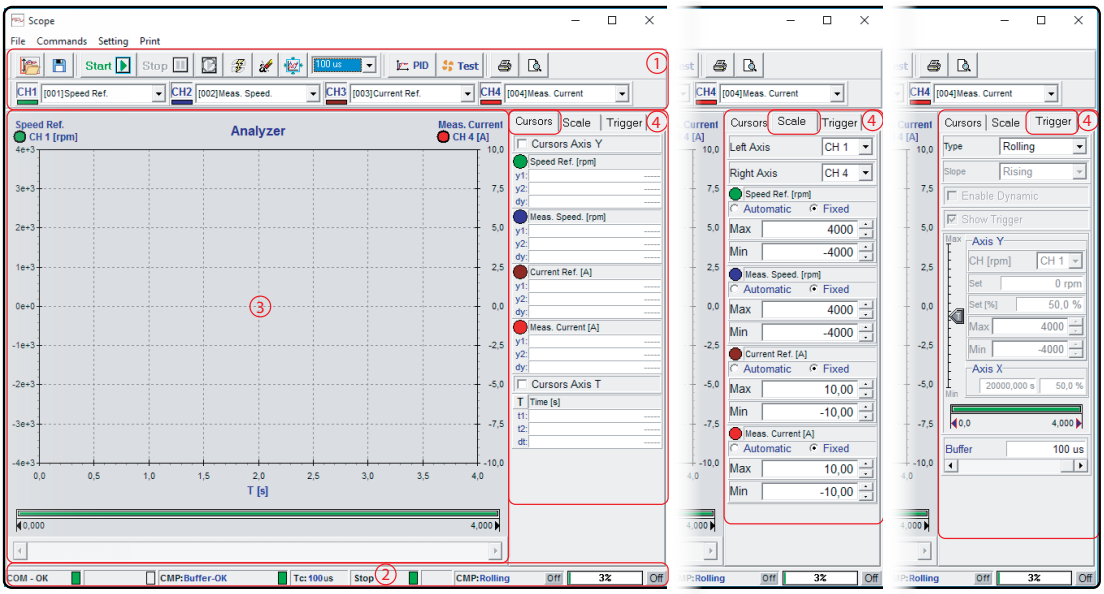

NOTES:

- Timebase resolution is adjustable up to a total display time equal to 60000 seconds, depending to choosen sampling time. Buffer is FIFO type, so for this reason first data stored will be lost if monitoring continues besides full time elapsed.
- Channels are enabled pushing '***CHx***' key related to desired channel.
- If comunication buffer, visible on state bar, exceed maximun size (100%), the transmission crashes.
- To mark traced, a color palette is available, pushing the coloured round visible near Channel identification in toolbar.

Main scope icons, in the toolbar, are described below:

Icon	Description
	Open a saved Scope session: it opens a previous saved session. *Save current Scope session in a PC folder.*
Start	*Start acquiring command*: it starts data acquiring with selected sampling time. Stop *Stop acquiring command.*
	Force Scope Trigger: this icon forces a start acquiring command at pressing. This key is enabled only after *Start acquiring command pressed.* Function is useful when trigger is set in 'Automatic' or 'One shot' mode and allow to crossover trigger setup into *setting window.* *Restart Trigger:* only in 'One Shot' mode, it allows to restart waiting trigger; This key is enabled only after total acquiring time is elapsed.
	Erase graph: it erases actual acquired data or, during monitoring, it restarts acquiring. Stored data will be lost. *Refresh graph:* restart data acquiring.
	Scope channel setting: it opens a new window to set 4 channels to monitor, choosed from a preset list. It aalows to set channels desired sampling time too.
PID	*PID setting:* it opens a new window to set PID regulator cefficients in realtime and to enable 'Wave Generator' function.
Test	*TEST:* it opens a new window to set position target values (from 2 and up to 5 values) used to tune loop gain regulator parameters, in order to test all real automation system performances.

6.13.1 Scope: 'CHANNEL SETTING'

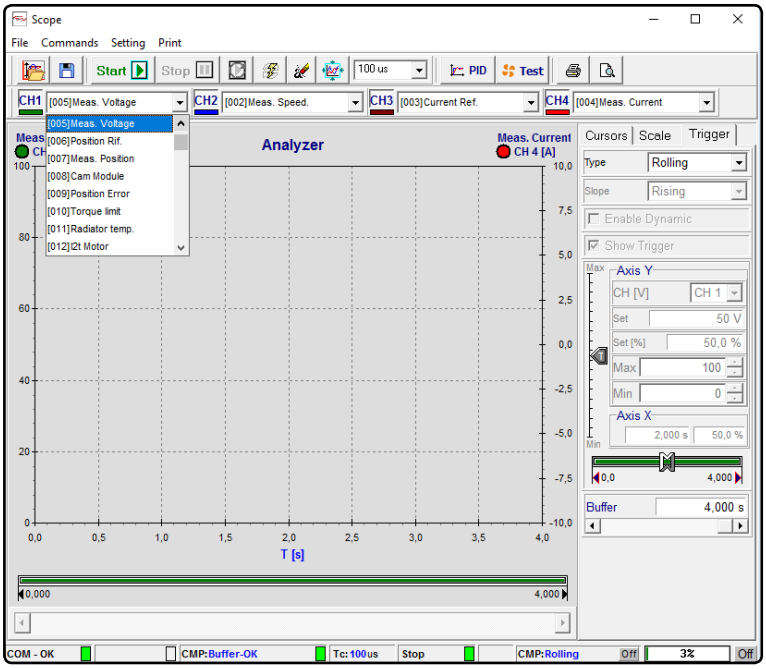

Image nearby shows how to set sampling time and Scope channels, among which the main are:

- *Speed reference and measured speed* (RPM).
- *Current referenceand measured current* (A).
- *Position reference, measured position and position error.*
- *DCbus measured voltage* (V).
- *Torque limit* (%).
- *Heatsink measured temperature* (°C).
- *Drive and motor I2T* (°C).
- *Digital I/O logic status.*
- *Bit-word status for Modbus RTU and Canopen® protocols.*

6.13.2 Scope: 'PID SETTING' and 'WAVE GENERATOR'

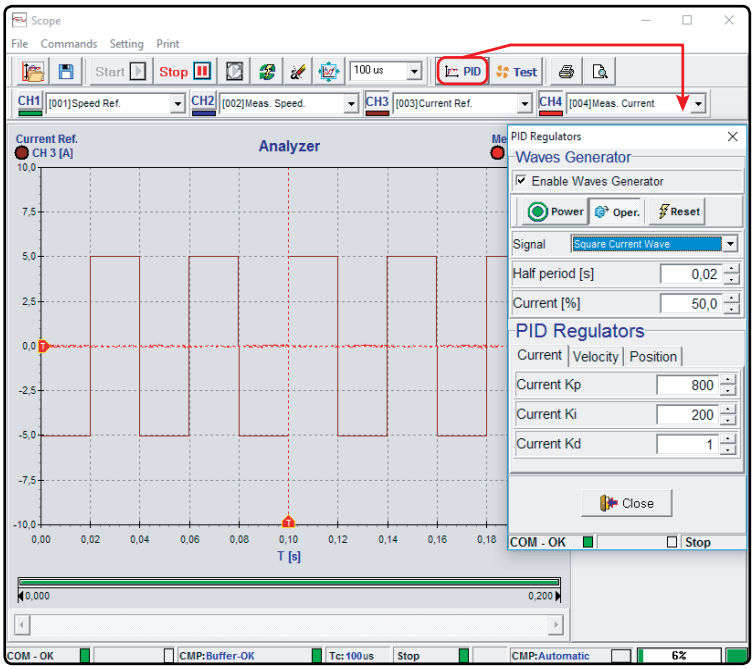

Scope allows to use a Wave Generator to create simulated input current (with 90° encoder phase autoshift) and speed references that drive has to follow.

Generated waveforms are settable as shown below:

- square wave
- triangular wave
- sinusoidal wave

SWITCH-ON, OPERATION ENABLED and RESET commands could be launched directly in this window.

Speed/current reference is created setting desired operating speed/current and waveform period.

If the connected load permits it, speed/current and position regulators could be set in realtime in order to perform tuning for all automation system parameters. For further informations about gain loop tuning, please see *"6.22 Closed loop regulation tuning" pag. 92*.

6.13.3 Scope: 'TEST'

This function allows to set target postion values that drive has to cyclically reach: so this function performs a cyclic positioner simulator. It allows to set operation speed to reach during positioning and to set CW/CCW acceleration and deceleration ramps .

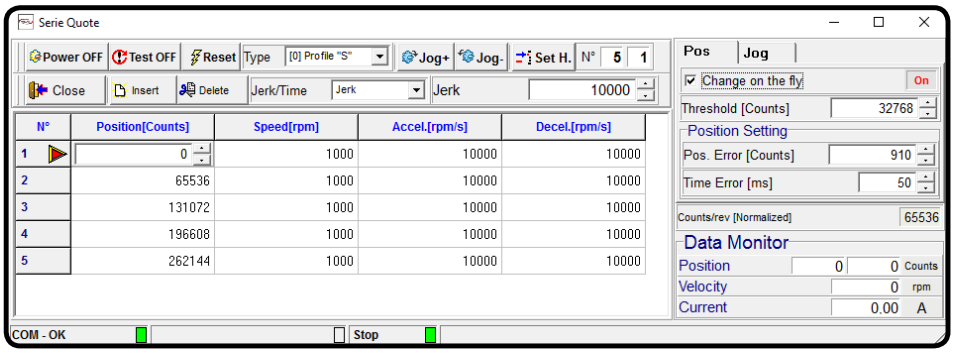

It allows to set:

- up to 5 target position values.
- following position profile, that can be set as standard ramps with related acceleration and deceleration parameters, and as S ramps with JERK.
- change target on the fly.
- position target values, that can be set as number of turns (revolution parameter) or as angular/linear target to perform respect to an initial offset position and to an operating speed.
- JOG function, with related parameters.
- *Power ON, Test OFF, RESET, JOG* and *Start Quota* commands, that could be launched directly in this window.

If the connected load permits it, speed/current and position regulators could be set in realtime in order to perform tuning for all automation system parameters. For further informations about gain loop tuning, please see *"6.22 Closed loop regulation tuning" pag. 92*.

6.13.4 Scope: 'TRIGGER'

Trigger modes are listed below:

- **Rolling**: in this mode, Scope acquires continuously all enable channel data; trigger menu shown below is disabled.
- **Automatic**: in this mode, Scope acquires data every occured trigger condition; trigger menu is enabled in order to allow setting channel selection, trigger amplitude and position time fopr triggering.
- **One Shot**: in this mode, Scope acquires data once, only when desired condition trigger is occured; trigger menu is enabled in order to allow setting channel selection, trigger amplitude and position time fopr triggering.

Optional dinamic trigger (Enable Dinamic) allows to visualize data in realtime during acquiring.

Buffer bar, shown at the low of trigger menu, allows to set total or partial data related to time axis up to maximum admitted acquiring time. Decreasing visualization time, only a part of acquired data is shown in Scope, while the resolution is unchanged.

It's recommended to set buffer bar correctly in order to view periodic signals in realtime.

An example of trigger setting and related acquiring condition is shown below; acquiring condition is enabled on channels described below:

1. CH1 - Speed Reference: this is the read reference provided to drive into the main speed reference input; trigger will acquire this channel when signal rises beyond threshold set into *trigger set-up window*.
2. CH2 - Measured Speed: this signal is the motor speed reading.
3. CH4 - Measured Current: this signal is the supplied current reading.

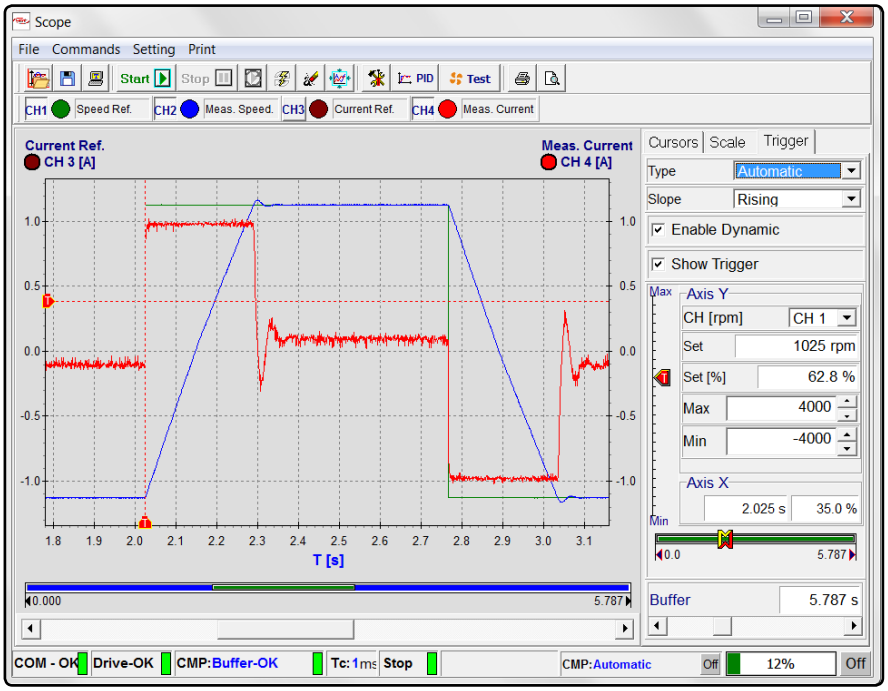

6.14 HALL sensors feedback control

The HALL effect sensors for a motor with *n poles* provide a speed data of low resolution as a single revolution of the motor is divided into 3 x *n* parts.

For example, for a 6-pole motor,18 positions per revolution are obtained. As it is, it follows that this mode does not provide good performance at low speeds. It has a good function starting from 10% of maximum speed, therefore, in the case of a 3000RPM motor, good performance are granted at more than 300RPM.

It is allowed to operate with a feedback from HALL sensors:

- in every supported operation modes: it's recommended only for speed or torque control application at low performance (not recommended for position control application).
- with rotary, linear and tubular brushless motors and permanent magnets continuous current motors.

Speed and/or Torque loop regulators are active (also position regulator could be active but it's not recommended for position control application).

To enable operation with feedback from Hall sensor, set related feedback type in the Motor Data menu item, after selecting the appropriate motor type.

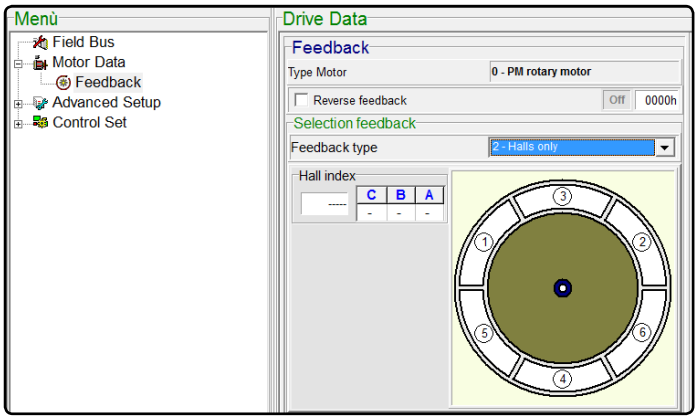

For the choice of the control (torque or speed), set its type to the 4th Menu item. The following image shows an example of setting of a torque control working with Input /Output mode, then you can set:

- the type of reference: analog mode in case of Input / Output mode , Modbus RTU mode or internal mode in case of fieldbus (in the case shown in picture the reference of torque is analog).
- the setting of the limiters, of full scale for the analog inputs.
- optimal PID regulators for application.

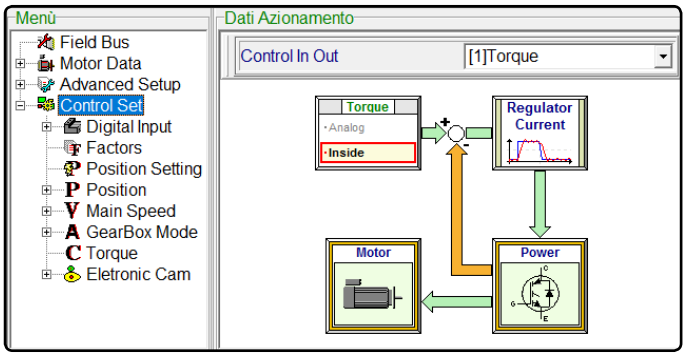

In order to obtain a correct operation, please ensure to perform Factors calculation procedure: please see *"6.05 Factors" pag. 57*.

6.14.1 Connections Motion controller-drive-motor

See *"Ch. 5 Wiring and connections" pag. 22* for more details about connectors. The connections are the following:

» **J4 connector**:

1. supply +5V power to the feedback of used motor: +5E (pin 7) and GND (pin 8).
2. connect the three signals of HALL: HA (pin 10), HB (pin 11) and HC (pin 12).

» **J3 connector** *for the Input/Output mode*,depending on the control to use:

1. provide the main torque/speed reference in the differential input (pins 1 and 2) or the frequency reference (pins 12,13,14 and 15) for the speed control. For details about input reference, please see *"6.09 Drive References" pag. 66*.
2. provide the auxiliary reference for the limit torque control or for second speed reference (pin 3 and 4). For details about input reference, please see *"6.09.2 Auxiliary Reference" pag. 67*.
3. connect the appropriate input and output signals (please see *"6.08 Digital I/O" pag. 62*).

» **J2 and J3 connectors** for fieldbus operation mode:

1. connect the wiring for the fieldbus, if used.
2. connect the appropriate input and ouput signals.

The basic diagram, in the following picture, shows the tipical connection diagram between drive-motor and with an external controller, during an analog reference or via fieldbus comunication:

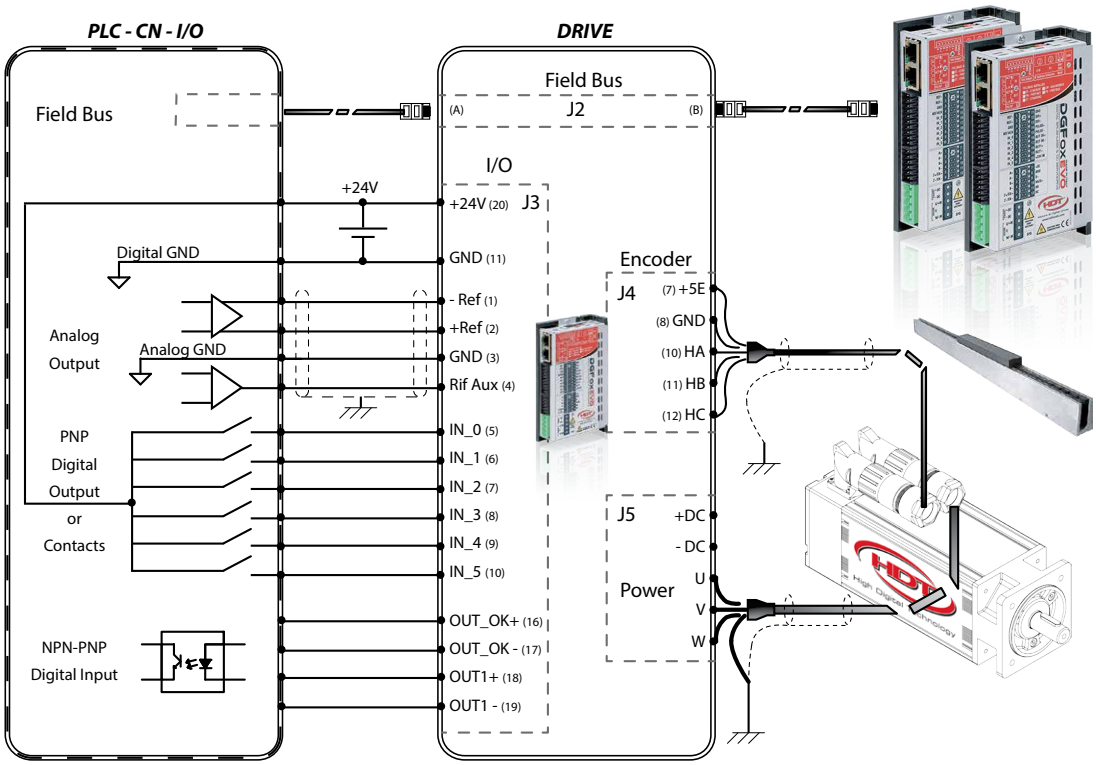

NOTES:

- The GND to pin 3 and 11 of connector J3 are connected inside the drive.
- If the external controller do not have analog differential outputs, but single, connect the pin *-Ref* to the reference *GND* pin 3; then jumper connect on the connector on the side of the drive or on the side of the external controller.
- To avoid noises of electromagnetic nature on the analog signals, please twist the cable and keep the signal cables far from power supply wiring of the motor as much as possible. Motor cable shields (both encoder and power cables) must be connected to related earth connection pins both drive and motor side.

6.15 Incremental encoder feedback control

In this mode, drive uses the Hall sensors to detect the position of the motor shaft and the signals of an incremental encoder with 2 channels to detect the speed. In this way you get a good control even at low speed and the speed control is not affected by load variations of the system. To operate more linearly at low speed is recommended at least an encoder with 1000 pulses per revolution or higher.

ONLY IF application does not require motor brake function and vertical axis**, a control feedback from incremental channel only is allowed: in order to align poles, at every SWITCH-ON command, **the converter performs a rotation angle, more or less pronounced, depending on the rotor position in that moment.

It is allowed to operate with a feedback from incremental encoder:

- in every supported operation mode and with every control topology (torque/speed/position).
- with rotary, linear and tubular brushless motors and permanent magnets continuous current motors.

Speed and/or Torque loop regulators are active. Position regulator is active during position control.

To enable operation with feedback from incremental encoder (or Incremental encoder + HALL sensors), set related feedback type in the Motor Data menu item, after selecting the appropriate motor type.

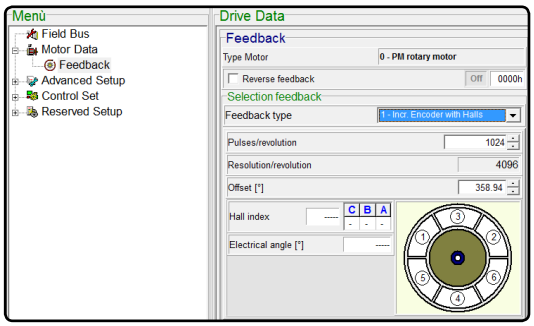

For the choice of the control (torque, speed or position), set its type to the 4th Menu item. The following image shows an example of setting of a speed control, with torque limit, working in Modbus RTU mode, then you can set:

- the reference type, analog mode in case of Input / Output mode and Modbus RTU mode or internal mode in case of fieldbus (in the case shown in picture, speed and torque reference are analog).
- full scale for analog analog inputs.
- optimal PID regulators for application.

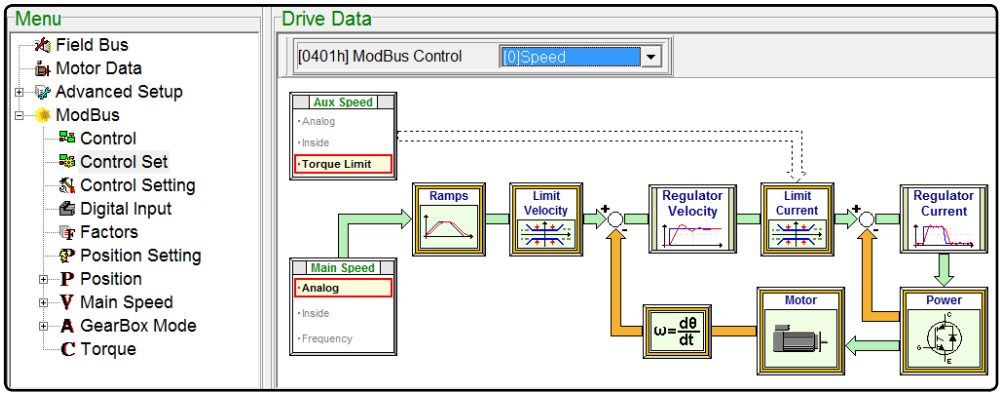

In order to obtain a correct operation, please ensure to perform Factors calculation procedure: please see *"6.05 Factors" pag. 57*.

6.15.1 Connections Motion controller-drive-motor

See *"Ch. 5 Wiring and connections" pag. 22* for more details about connectors. The connections are the following:

» **J4 and J6 connectors**:

1. supply +5V power to the feedback of used motor: +5E (pin 7) and GND (pin 8)
2. connect the three incremental signals: A+ (pin 1), A- (pin 2), B+ (pin 3), B- (pin 4), Z+ (pin 5), Z- (pin 6). It's possible to provide incremental channels to external controller via J6 connector in order to close/check position loop externally.
3. if available, connect zero index: Z+ (pin 5), Z- (pin 6) and HALL signals: HA (pin 10), HB (pin 11) e HC (pin 12).

» **J3 connector** *for the Input/Output mode*,depending on the control to use:

1. provide the main torque/speed reference in the differential input (pins 1 and 2) or the frequency reference (pins 12,13,14 and 15) for the speed/position control. For details about input reference, please see *"6.09 Drive References" pag. 66*.
2. provide the auxiliary reference for the limit torque control or for second speed reference or for analog position reference (pin 3 and 4). For details about input reference, please see *"6.09.2 Auxiliary Reference" pag. 67*.
3. connect the appropriate input and output signals (please see *"6.08 Digital I/O" pag. 62*).

» **J2 and J3 connectors** for fieldbus operation mode:

1. connect the wiring for the fieldbus, if used.
2. connect the appropriate input and ouput signals.

The basic diagram, in the following picture, shows the tipical connection diagram between drive-motor and with an external controller, during an analog reference or via fieldbus comunication:

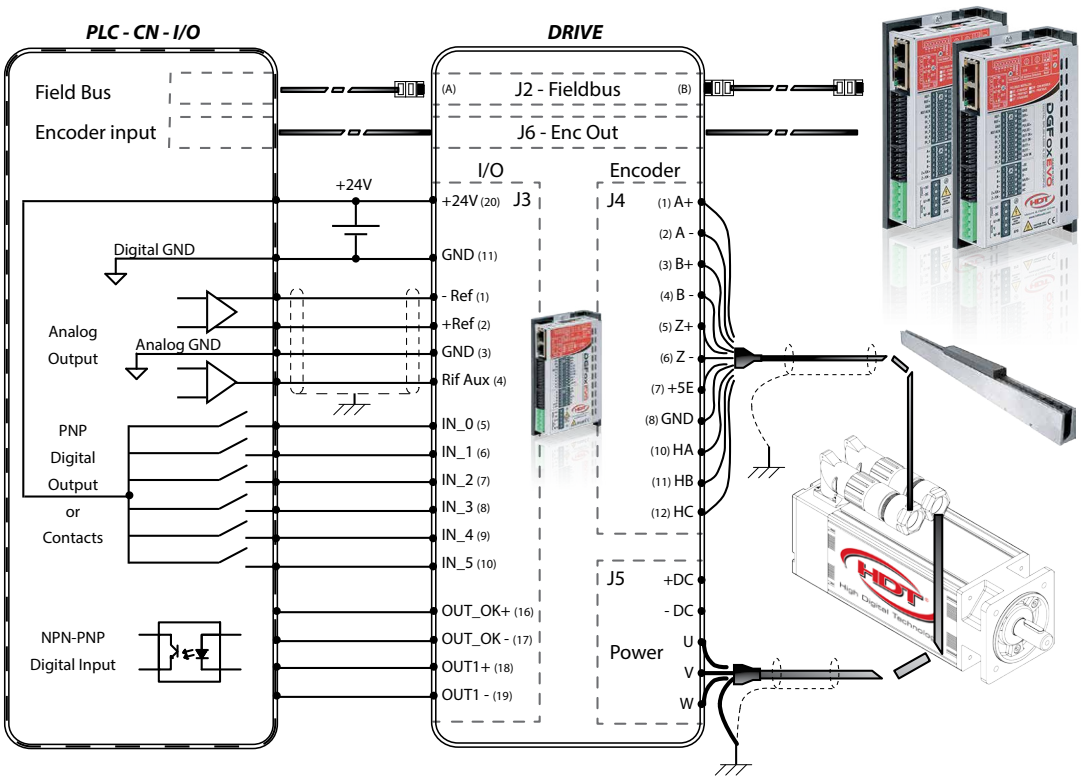

NOTES:

- The GND to pin 3 and 11 of connector J3 are connected inside the drive.
- If the external controller do not have analog differential outputs, but single, connect the pin *-Ref* to the reference *GND* pin 3; then jumper connect on the connector on the side of the drive or on the side of the external controller.
- To avoid noises of electromagnetic nature on the analog signals, please twist the cable and keep the signal cables far from power supply wiring of the motor as much as possible. Motor cable shields (both encoder and power cables) must be connected to related earth connection pins both drive and motor side.

6.16 Absolute Encoder feedback control

An absolute encoder feedback is provided by drive with a synchronous serial communication under SSI protocol. *Clock* and *Data*, usefull to get encoder absolute position, are provided with differential line driver hardware (+5V).

It is allowed to operate with a feedback from absolute encoder:

- in every supported operation mode and with every control topology (torque/speed/position).
- with rotary, linear and tubular brushless motors and permanent magnets continuous current motors.

Speed and/or Torque loop regulators are active. Position regulator is active during position control.

To enable operation with feedback from SSI absolute encoder, set related feedback type in the Motor Data menu item, after selecting the appropriate motor type.

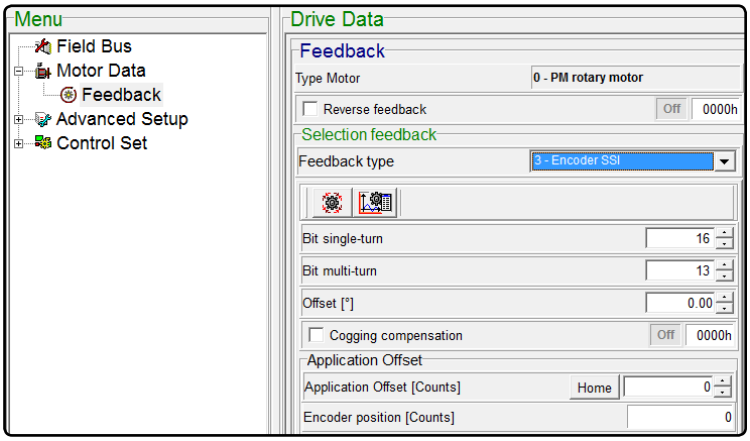

For the choice of the control (torque, speed or position), set its type to the 4th Menu item. The following image shows an example of setting of a speed control, with torque limit, working in Modbus RTU mode, then you can set:

- the reference type, analog mode in case of Input / Output mode and Modbus RTU mode or internal mode in case of fieldbus (in the case shown in picture, speed and torque reference are analog).
- full scale for analog analog inputs.
- optimal PID regulators for application.

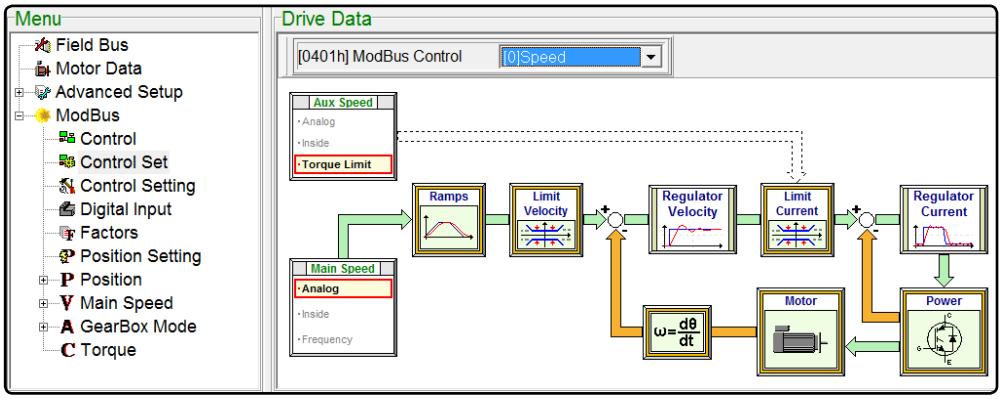

In order to obtain a correct operation, please ensure to perform Factors calculation procedure: please see *"6.05 Factors" pag. 57*.

6.16.1 Connections Motion controller-drive-motor

See *"Ch. 5 Wiring and connections" pag. 22* for more details about connectors. The connections are the following:

» **J4 and J6 connector**:

1. supply +5V power to the feedback of used motor: +5E (pin 7) and GND (pin 8).
2. connect absolute encoder clock and data signals: CK+ (pin 5), CK - (pin 6), D - (pin 9) e D+ (pin10).
3. if available, connect the incremental signals: A+ (pin 1), A- (pin 2), B+ (pin 3), B- (pin 4) and they could be provide to external controller via J6 connector in order to close/check position loop externally.

» **J3 connector** *for the Input/Output mode*,depending on the control to use:

1. provide the main torque/speed reference in the differential input (pins 1 and 2) or the frequency reference (pins 12,13,14 and 15) for the speed/position control. For details about input reference, please see *"6.09 Drive References" pag. 66*.
2. provide the auxiliary reference for the torque limit control or for second speed reference or for analog position reference (pin 3 and 4). For details about input reference, please see *"6.09.2 Auxiliary Reference" pag. 67*.
3. connect the appropriate input and output signals (please see *"6.08 Digital I/O" pag. 62*).

» **J2 and J3 connectors** for fieldbus operation mode:

1. connect the wiring for the fieldbus, if used.
2. connect the appropriate input and ouput signals.

The basic diagram, in the following picture, shows the tipical connection diagram between drive-motor and with an external controller, during an analog reference or via fieldbus comunication:

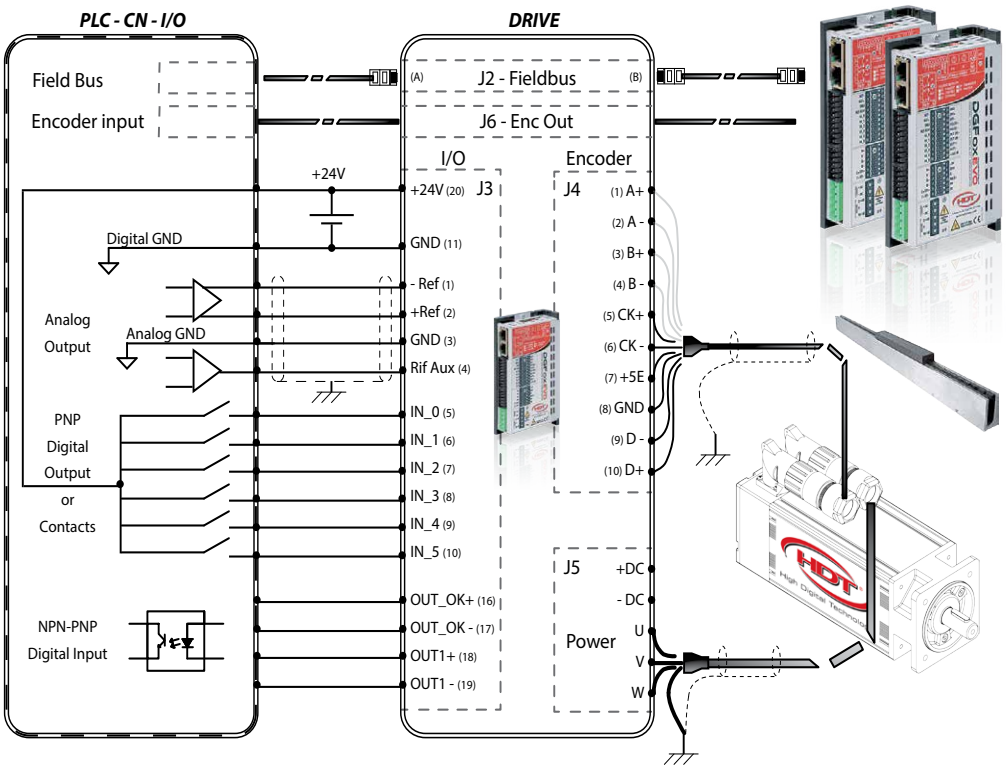

NOTES:

- The GND to pin 3 and 11 of connector J3 are connected inside the drive.
- If the external controller do not have analog differential outputs, but single, connect the pin *-Ref* to the reference *GND* pin 3; then jumper connect on the connector on the side of the drive or on the side of the external controller.
- To avoid noises of electromagnetic nature on the analog signals, please twist the cable and keep the signal cables far from power supply wiring of the motor as much as possible. Motor cable shields (both encoder and power cables) must be connected to related earth connection pins both drive and motor side.

6.17 Sensorless speed control

During sensorless control, drive does not use any feedback component, so motor position is extimated by an internal predictive algorithm. In the first phase, drive engage motor shaft with a V/F control, then it enables sensorless control.

Consequently, this control topology is designed only for applications that require medium-low performance where speed and position accuracy are not strictly necessary.

It is allowed to operate with a sensorless control:

- in every modes of operation.
- with rotary brushless motors only.
- in speed control with ramps only.
- with internal speed reference (Fieldbus reference) or analog reference.

Speed and current loop regulators are active.

To enable operation with sensorless feedback, set related feedback type in the Motor Data menu item, after selecting the appropriate motor type.

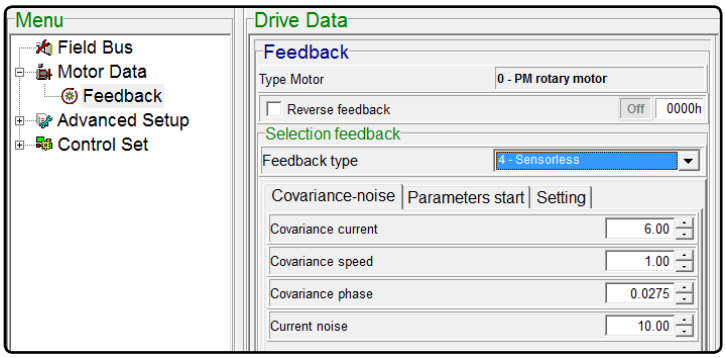

The following image shows an example of setting of a speed control, with torque limit, working in Modbus RTU mode, then you can set:

- the reference type, analog mode in case of Input / Output mode and Modbus RTU mode or internal mode in case of fieldbus (in the case shown in picture, speed and torque reference are analog).
- full scale for analog analog inputs.
- optimal PID regulators for application.

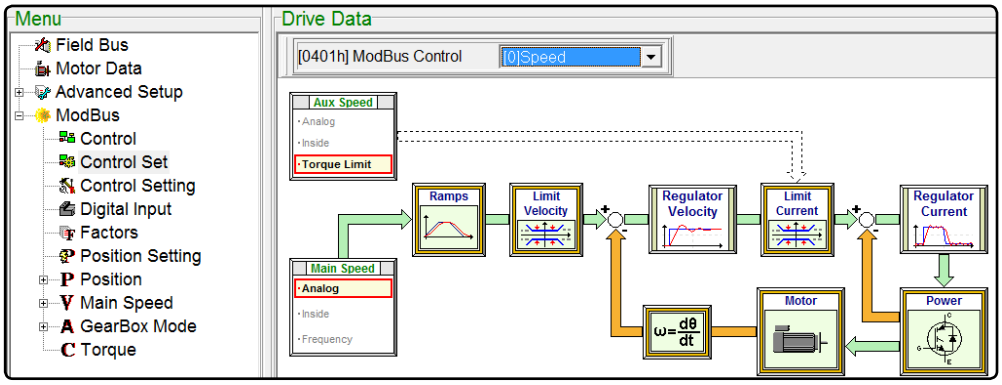

In order to obtain a correct operation, please ensure to perform Factors calculation procedure: please see *"6.05 Factors" pag. 57*.

6.17.1 Connections Motion controller-drive-motor

See *"Ch. 5 Wiring and connections" pag. 22* for more details about connectors. The connections are the following:

» **J3 connector** *for the Input/Output mode*, depending on the control to use:

1. connect the appropriate input and output signals (please see *"6.08 Digital I/O" pag. 62*).

» **J2 and J3 connectors** for fieldbus operation mode:

1. connect the wiring for the fieldbus, if used.
2. connect the appropriate input and ouput signals.

The basic diagram, in the following picture, shows the tipical connection diagram between drive-motor and with an external controller, during an analog speed control or via fieldbus comunication:

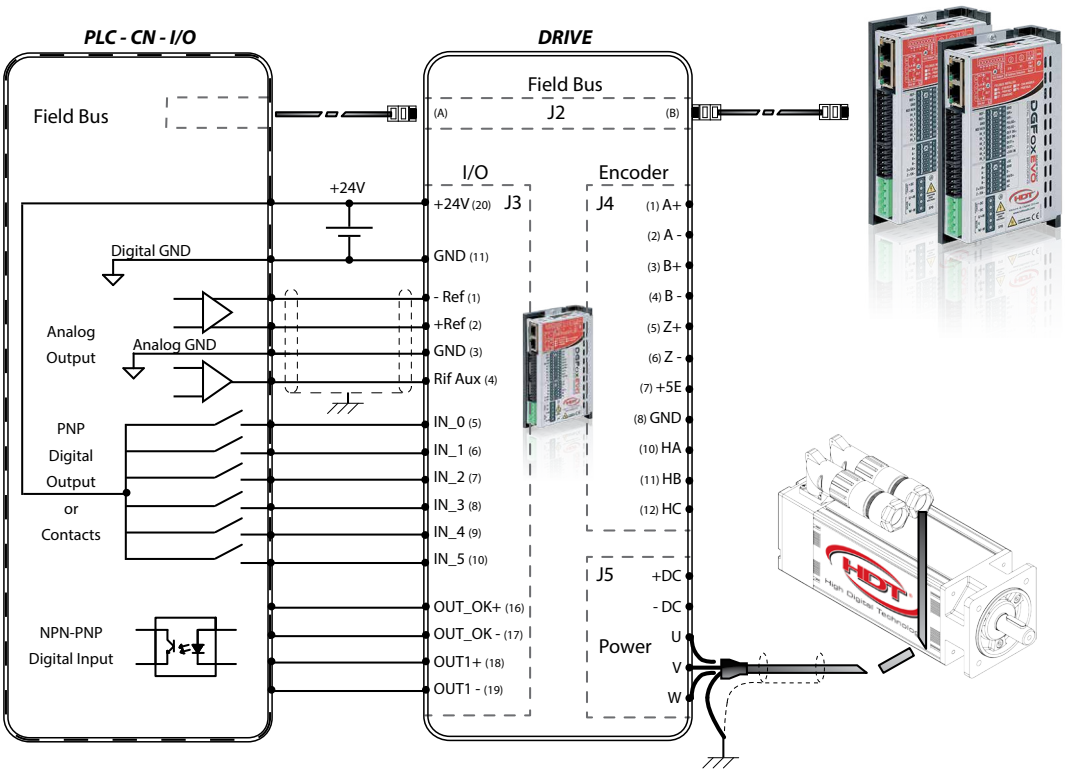

NOTES:

- The GND to pin 3 and 11 of connector J3 are connected inside the drive.
- To avoid noises of electromagnetic nature on the analog signals, please twist the cable and keep the signal cables far from power supply wiring of the motor as much as possible. Motor cable shields (power cables) must be connected to related earth connection pin both drive and motor side.

6.18 Position control: electronic gearbox mode

During "Electronic Gearbox" mode, drive uses two frequency signals as position reference; signals can get one function of these (details at *"6.09 Drive References" pag. 66*):

1. PULSE - DIRECTION
2. CHA - CHB (external encoder)
3. CW - CCW

It is allowed to operate with the electronic gearbox mode:

- in I/O, Modbus RTU, Canopen and Ethercat CoE operation mode.
- with rotary, linear and tubular brushless motors and permanent magnets continuous current motors.

It's recommended to provide the drive a pulse number per turn greater or equal to 1000. A lower pulse number could cause an irregolar rotation, expecially at low RPM. Besides, it's recommended to set one feedback of these:

- incremental channel and HALL sensors.
- absolute encoder.
- if necessary, only incremental encoder, without motor brake and vertical axis; it's not recommended to use only HALL sensors, because it does not offer good performance in position control.

Speed, Torque and Position loop regulators are active.

For the choice of the position control, set its type to the 4th Menu item (Electric Axis). The following image shows an example of I/O setting, then you can set:

- axis ratio: numerator (NUM) and denominator (DEN).
- master device pulse number ($PULSE_{master}$): it provides to slave the information about master device pulse number.
- engage, disengage and phase shift for slave axis parameters.
- Homing and JOG parameters.
- desired I/O configuration.
- optimal PID regulators for application.

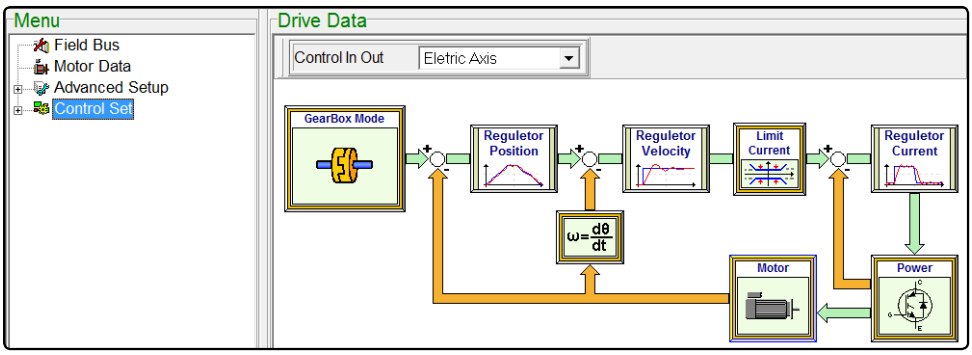

Therefore, number per turn performed by slave device, depending on frequency signal received, as shown in formula below:

$$N^{\circ}\,turn_{slave} = \frac{PULSE_{input}}{PULSE_{master}} \cdot \frac{NUM}{DEN}$$

Ratio between pulse number, read by slave drive ($PULSE_{input}$), and set master pulse number ($PULSE_{master}$) provides information about axis position of master device, whereas ratio between NUM and DEN provides information about axis position in turn of slave device related to master position in turn.

⚠ In order to obtain a correct operation, please ensure to perform Factors calculation procedure: please see *"6.05 Factors" pag. 57*.

6.18.1 Connections Motion controller-drive-motor

See *"Ch. 5 Wiring and connections" pag. 22* for more details about connectors. The connections are the following:

» **J4 and J6 connector**:

1. supply +5V power to the encoder of used motor: +5E (pin 7) and GND (pin 8).
2. if incremental encoder is used, please connect the three incremental signals and HALL sensors eventually: A+ (pin 1), A- (pin 2), B+ (pin 3), B- (pin 4), Z+ (pin 5), Z- (pin 6), HA (pin 10), HB (pin 11) and HC (pin 12). If necessary, provide incremental channel to an external controller via J6 connector, in order to check position loop externally.
3. if absolute encoder is used, please connect CK+ (pin 5), CK - (pin 6), D - (pin 9) and D+ (pin10), and eventually the two incremental channels A+ (pin 1), A- (pin 2), B+ (pin 3) and B- (pin 4), that could also be provided to an external controller via J6 connector, in order to close position loop externally.

» **J3 connector** *for the Input/Output mode*,depending on the control to use:

1. connect pin 12-13 and 14-15: respectively, direction reference or external encoder CHA signal or CCW signal and pulse reference or external encoder CHB signal or CW signal. For details about main frequency reference input, please see *"6.09 Drive References" pag. 66*.
2. connect the appropriate input and output signals (please see *"6.08 Digital I/O" pag. 62*).

» **J2 and J3 connectors** for fieldbus operation mode:

1. connect the wiring for the fieldbus, if used.
2. connect the appropriate input and ouput signals.

The basic diagram, in the following picture, shows the tipical connection to be made to the connectors (indicated by its name and pin-out) of the drive with the motor and with an external controller:

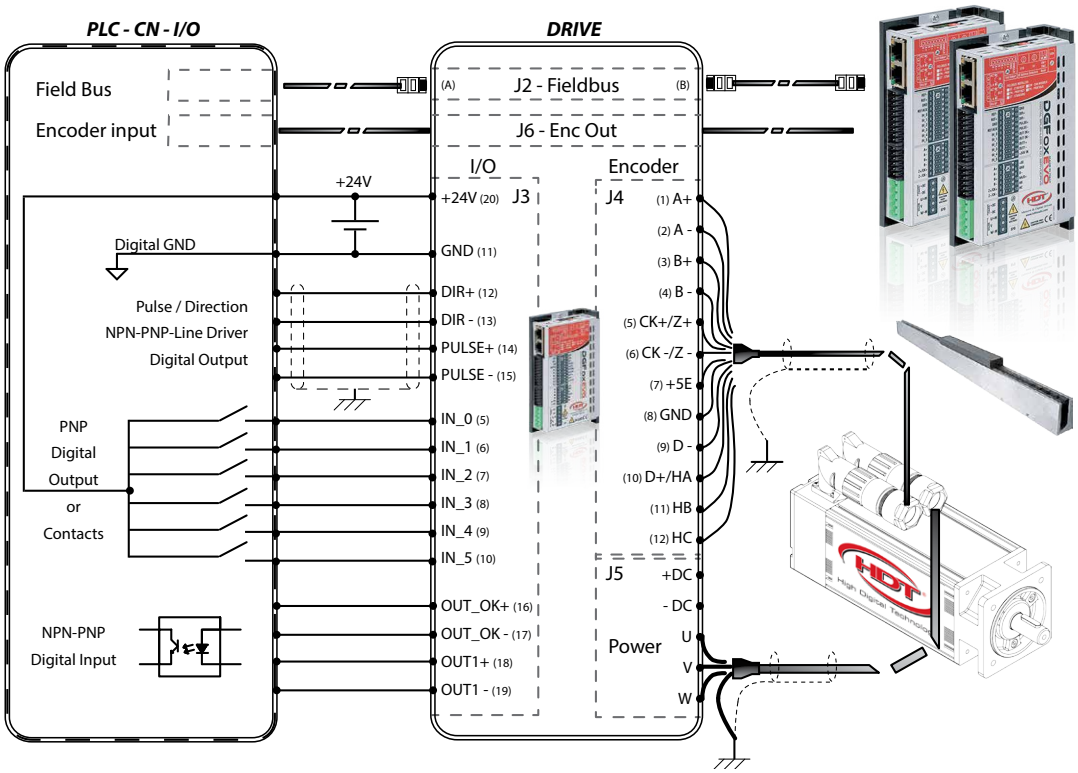

NOTES:

- The GND to pin 3 and 11 of connector J3 are connected inside the drive.
- To avoid noises of electromagnetic nature on the analog signals, please twist the cable and keep the signal cables far from power supply wiring of the motor as much as possible. Motor cable shields (both encoder and power cables) must be connected to related earth connection pins both drive and motor side.
- For further information about parameters, please see related Modbus RTU user guide, downloadable from enterprise web site:

www.hdtlovato.com

6.19 Position control: positioner mode

"Positioner" mode is settable as following:

1. *Single target positioning:* parameter target position with internal or main analog speed reference.
2. *Analog main reference positioning (12bit)*: setting minimum target position (equivalent 0V) and maximun target position (equivalent +10V) parameters, drive performs positioning between this two values following the 12 bit analog auxiliary reference range (0/+10V). Speed reference selectable between internal or main analog speed.
3. *Up to 64 target table selection positioning via digital input or via Profinet parameter*: at every start command, drive performs positioning at target identified by binary digital input combination.
4. *Up to 64 target cyclic/acyclic table positioning*: at every start command, drive performs cyclic or acyclic positioning between target set inside table.
5. *Up to 64 target table positioning via input start*: at every edge transition (Low to High) of the enabled input, it performs related target set in the table.

It is allowed to operate with the positioner mode:

- all positioner type in I/O, Modbus RTU and Profinet (only single target and 64 target table selection).
- with rotary, linear and tubular brushless motors and permanent magnets continuous current motors.

It's recommended to provide the drive a pulse number per turn greater or equal to 1000. A lower pulse number could cause an irregolar rotation, expecially at low RPM. Besides, it's recommended to set one feedback of these:

- incremental channel and HALL sensors.
- absolute encoder.
- if necessary, only incremental encoder, without motor brake and vertical axis; it's not recommended to use only HALL sensors, because it does not offer good performance in position control.

Speed, Torque and Position loop regulators are active.

For the choice of the position control, set its type to the 4th Menu item (Position). The following image shows an example of I/O setting, then you can set:

- desired position application type.
- position profile type between trapezoidal or ramps with/without JERK.
- recovery position and End position pocedures.
- Homing and JOG parameters.
- desired I/O configuration.
- optimal PID regulators for application.

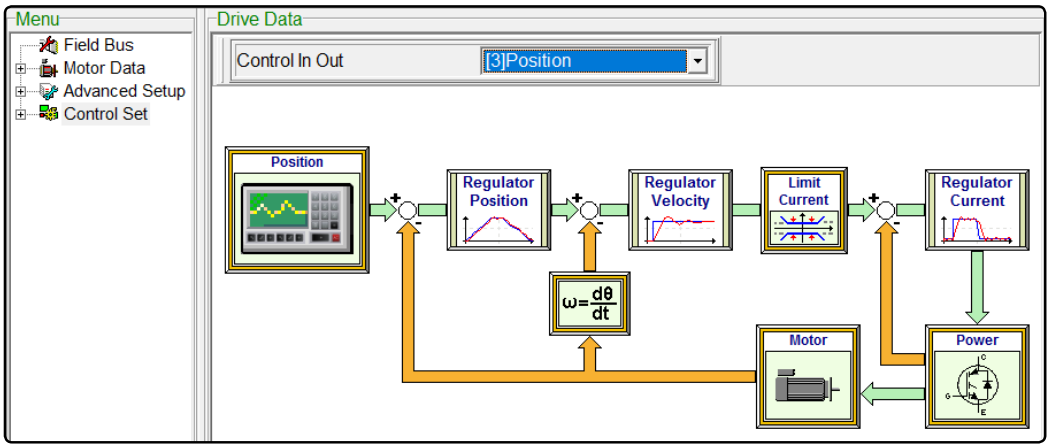

In order to obtain a correct operation, please ensure to perform Factors calculation procedure: please see *"6.05 Factors" pag. 57*.

6.19.1 Connections Motion controller-drive-motor

See *"Ch. 5 Wiring and connections" pag. 22* for more details about connectors. The connections are the following:

» **J4 and J6 connector**:

1. supply +5V power to the encoder of used motor: +5E (pin 7) and GND (pin 8).
2. if incremental encoder is used, please connect the three incremental signals and HALL sensors eventually: A+ (pin 1), A- (pin 2), B+ (pin 3), B- (pin 4), Z+ (pin 5), Z- (pin 6), HA (pin 10), HB (pin 11) and HC (pin 12). If necessary, provide incremental channel to an external controller via J6 connector, in order to check position loop externally.
3. if absolute encoder is used, please connect CK+ (pin 5), CK - (pin 6), D - (pin 9) and D+ (pin10), and eventually the two incremental channels A+ (pin 1), A- (pin 2), B+ (pin 3) and B- (pin 4), that could also be provided to an external controller via J6 connector, in order to check position loop externally.

» **connettore J2 e J3** *per la modalità di funzionamento Input/Output o in bus di campo supportato:*

1. if single target positioning is used: provide speed analog reference +/-10V (pin 1-2 of J3) if used. For details about main reference input, please see *"6.09 Drive References" pag. 66*.
2. if analog positioning is used: provide position analog reference 0/+10V (pin 4-3 of J3). For details about input reference, please see *"6.09.2 Auxiliary Reference" pag. 67*. I's possible to use also main input reference for analog speed reference +/-10V.
3. connect the wiring for the fieldbus, if used.
4. connect the appropriate input and ouput signals.

The basic diagram, in the following picture, shows the tipical connection to be made to the connectors of the drive with the motor and with an external controller related to a table positioner via digital input:

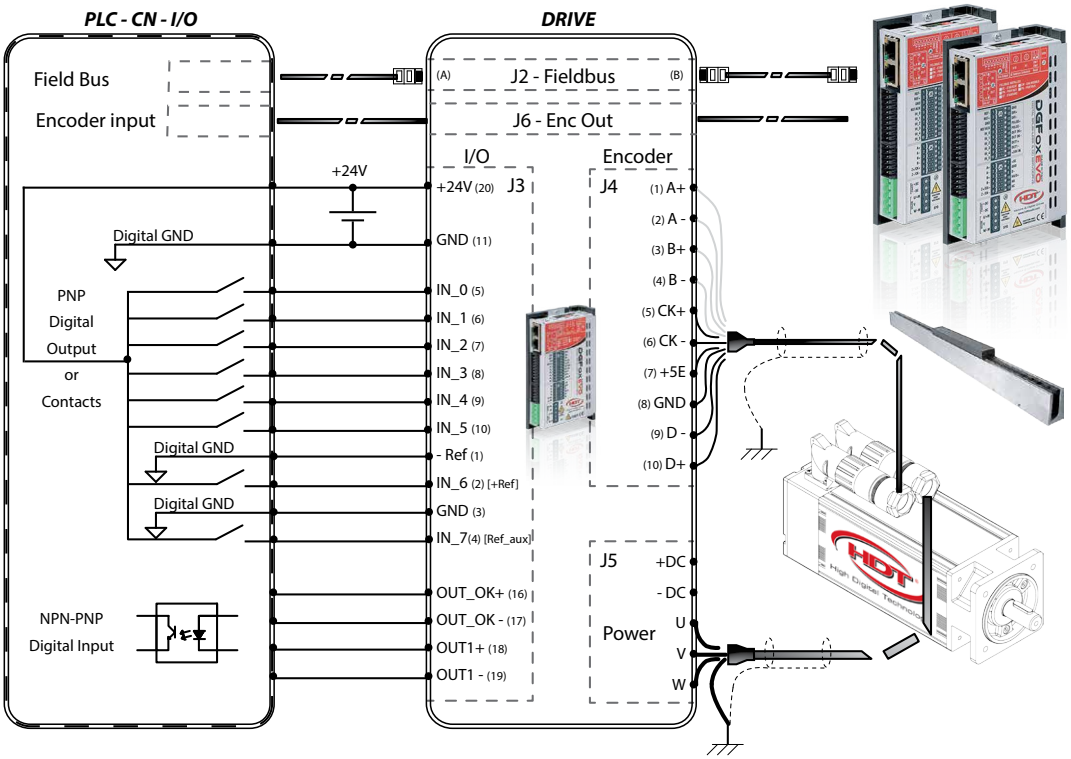

NOTES:

- The GND to pin 3 and 11 of connector J3 are connected inside the drive.
- To avoid noises of electromagnetic nature on the analog signals, please twist the cable and keep the signal cables far from power supply wiring of the motor as much as possible. Motor cable shields (both encoder and power cables) must be connected to related earth connection pins both drive and motor side.
- For further information about parameters, please see related Modbus RTU user guide, downloadable from enterprise web site:

www.hdtlovato.com

6.20 Position control: electronic cam mode

During "Electronic Cam" mode, drive uses two frequency signals as position reference; signals can get one function of these (details at *"6.09 Drive References" pag. 66*):

1. PULSE - DIRECTION
2. CHA - CHB (external encoder)

It is allowed to operate with the electronic gearbox mode:

- in I/O and Modbus RTU operation modes.
- with rotary, linear and tubular brushless motors and permanent magnets continuous current motors.

It's recommended to provide the drive a pulse number per turn greater or equal to 1000. A lower pulse number could cause an irregolar rotation, expecially at low RPM. Besides, it's recommended to set one feedback of these:

- incremental channel and HALL sensors.
- absolute encoder.
- if necessary, only incremental encoder, without motor brake and vertical axis; it's not recommended to use only HALL sensors, because it does not offer good performance in position control.

Speed, Torque and Position loop regulators are active.

For the choice of the position control, set its type to the 4th Menu item (Electronic Cam). The following image shows an example of I/O setting, then you can set:

- up to 8 cam tables and up to 576 points per cam with linear or cubic interpolation.
- axis rate (Numerator e Denominator) and Master and Slave Module pulses for every cam.
- engage, disengage and phase shift position parameters for slave axis, Homing and JOG parameters.
- desired I/O configuration and optimal PID regulators for application.

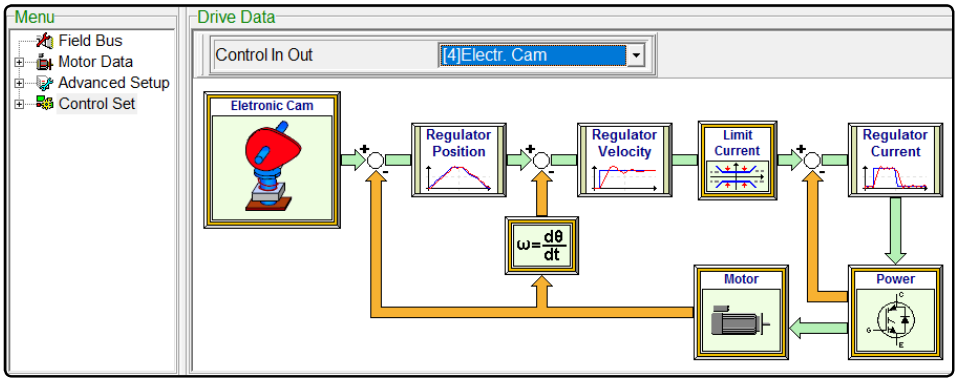

This operating mode allows a control in space of axis related to a space reference acquired from encoder, conditioned by the values of "Encoder Numerator" and "Encoder Denominator". This function can be used in application that require to follow special curves such as Packaging machines, Flying saw, Flying shear, Cut to Lenght and more.

The "Master module" indicates master encoder pulse number used to calculate shape of cam profile. The result of the division of "Master module" and "Number of table points" gives the space range between two consecutive points of the table. The profile of the cam between two points is calculated using a cubic interpolation.

The "Slave module" represent the excursion of the cam measured in terms of resolver pulses (the numbers of resolver pulses in a single revolution of the motor shaft is 65535), Every point of the cam table (that can range from 0 to 65535) is multiply for the "Slave module" and divided for 65536, in this way every point of the cam table can take an effective value ranging from 0 and "Slave module ".

$$\Delta space._{cam.point} = \frac{MODULE_{MASTER}}{N°_{table.point} - 1} \qquad Value._{cam.point} = \frac{MODULE_{SLAVE} \cdot Value._{table.point}}{65536}$$

In order to obtain a correct operation, please ensure to perform Factors calculation procedure: please see *"6.05 Factors" pag. 57*.

6.20.1 Connections Motion controller-drive-motor

See *"Ch. 5 Wiring and connections" pag. 22* for more details about connectors. The connections are the following:

» **J4 and J6 connector**:

1. supply +5V power to the encoder of used motor: +5E (pin 7) and GND (pin 8).
2. if incremental encoder is used, please connect the three incremental signals and HALL sensors eventually: A+ (pin 1), A- (pin 2), B+ (pin 3), B- (pin 4), Z+ (pin 5), Z- (pin 6), HA (pin 10), HB (pin 11) and HC (pin 12). If necessary, provide incremental channel to an external controller via J6 connector, in order to check position loop externally.
3. if absolute encoder is used, please connect CK+ (pin 5), CK - (pin 6), D - (pin 9) and D+ (pin10), and eventually the two incremental channels A+ (pin 1), A- (pin 2), B+ (pin 3) and B- (pin 4), that could also be provided to an external controller via J6 connector, in order to close position loop externally.

» **J3 connector** *for the Input/Output mode*,depending on the control to use:

1. connect pin 12-13 and 14-15: respectively, direction reference or external encoder CHA signal and pulse reference or external encoder CHB signal. For details about main frequency reference input, please see *"6.09 Drive References" pag. 66*.
2. connect the appropriate input and output signals (please see *"6.08 Digital I/O" pag. 62*).

» **J2 and J3 connectors** for fieldbus operation mode:

1. connect the wiring for the fieldbus, if used.
2. connect the appropriate input and ouput signals.

The basic diagram, in the following picture, shows the tipical connection to be made to the connectors (indicated by its name and pin-out) of the drive with the motor and with an external controller:

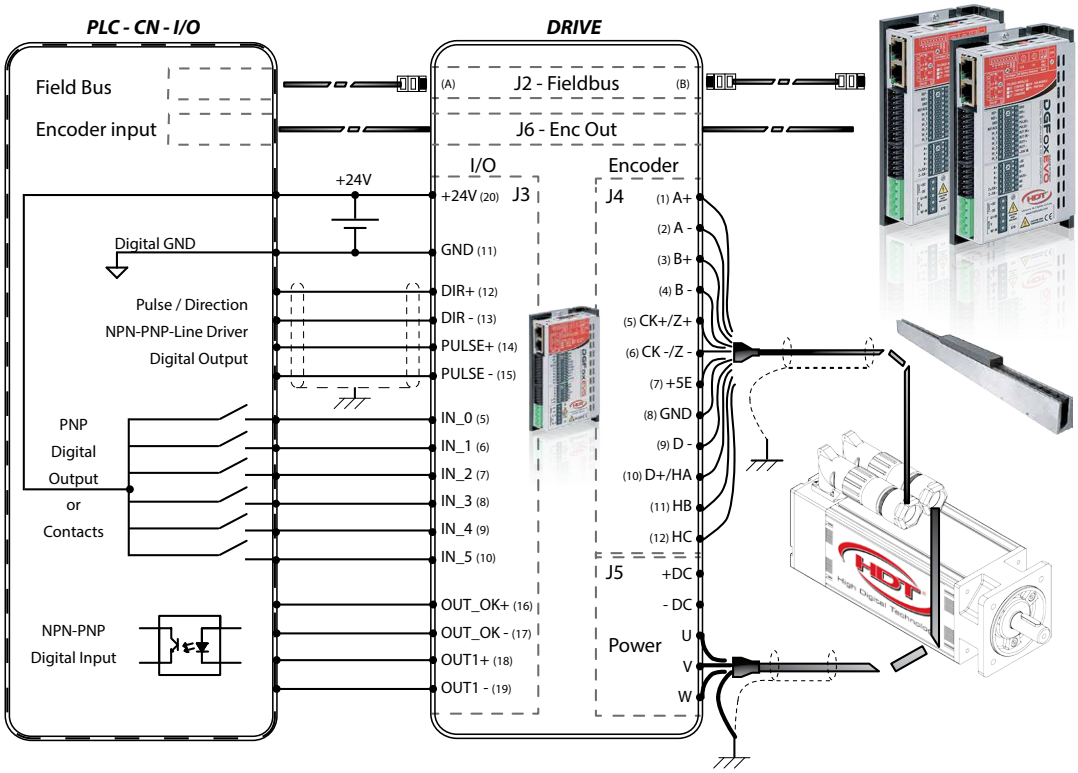

NOTES:

- The GND to pin 3 and 11 of connector J3 are connected inside the drive.
- To avoid noises of electromagnetic nature on the analog signals, please twist the cable and keep the signal cables far from power supply wiring of the motor as much as possible. Motor cable shields (both encoder and power cables) must be connected to related earth connection pins both drive and motor side.
- For further information about parameters, please see related Modbus RTU user guide, downloadable from enterprise web site:

www.hdtlovato.com

6.21 Pressure control

"Press" control mode is designed expressly for applications that use servo-pumps like in presses and plastic injection machine, which are applications that combine an idraulic system with an electrical regulation via servodrive and brushless motor.

Three inputs are enabled: the first input for the speed reference signal is used to regolate the speed of a motor connected to a pump, and so the respective flow; the second input is enabled to receive the pressure reference signal, and the third input is enabled for the pressure transducer signal (pressure feedback). For further information, please see *"6.09 Drive References" pag. 66*.

It is allowed to operate with the pressure control mode:

- for all operation modes.
- with rotary, linear and tubular brushless motors (and permanent magnets continuous current motors).

It's recommended to provide the drive a pulse number per turn greater or equal to 1000. A lower pulse number could cause an irregolar rotation, expecially at low RPM. Besides, it's recommended to set one feedback of these:

- incremental channel and HALL sensors.
- absolute encoder.
- if necessary, only incremental encoder, without motor brake and vertical axis; it's not recommended to use only HALL sensors, because it does not offer good performance in position control.
- resolver.

Speed, Torque and Pressure loop regulators are active.

For the choice of the pressure control, set its type to the 4th Menu item (Press). The following image shows an example of I/O setting, then you can set:

- type and fullscale for pressure reference or feedback, and speed/pressure ramps.
- speed, current and pressure limit, and overpressure and underpressure alarm threshold.
- desired I/O configuration and optimal current/speed PID regulators for application.

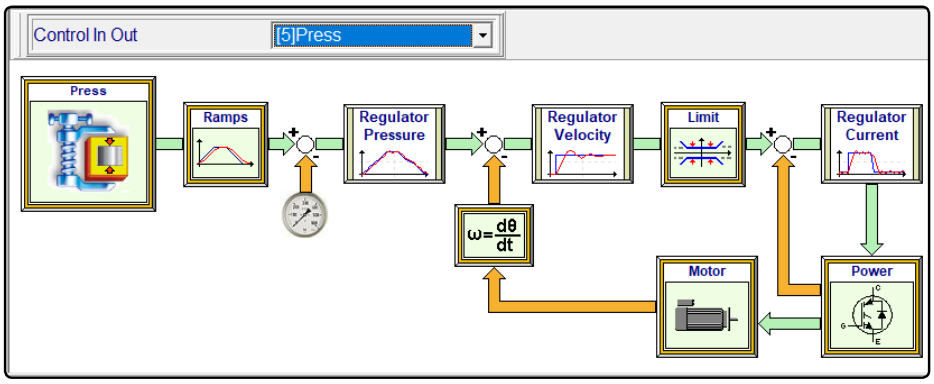

- Pressure PID regulator management shown a further exponential (2^) multiplier parameter useful during the tuning of the pressure loop regulation to appreciate visible variations. Default parameter set is a good compromise for the most servo press applications.

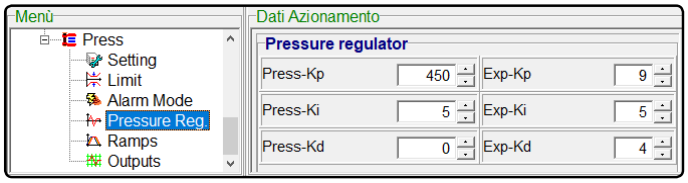

⚠ In order to obtain a correct operation, please ensure to perform Factors calculation procedure: please see *"6.05 Factors" pag. 57*.

6.21.1 Connections Motion controller-drive-motor

See *"Ch. 5 Wiring and connections" pag. 22* for more details about connectors. The connections are the following:

» **J4 connector**:

1. supply +5V power to the encoder of used motor: +5E (pin 7) and GND (pin 8).
2. if incremental encoder is used, please connect the three incremental signals and HALL sensors eventually: A+ (pin 1), A- (pin 2), B+ (pin 3), B- (pin 4), Z+ (pin 5), Z- (pin 6), HA (pin 10), HB (pin 11) and HC (pin 12).
3. if absolute encoder is used, please connect CK+ (pin 5), CK - (pin 6), D - (pin 9) and D+ (pin10).

» **J3 connector** *for the Input/Output mode*, depending on the control to use:

1. connect pin 1-2 for pressure transducer. If single ended input is available, connect jumper from pin 1 to pin 3 of J3 connector. For details about main frequency reference input, please see *"6.09 Drive References" pag. 66*.
2. connect the appropriate input and output signals (please see *"6.08 Digital I/O" pag. 62*).

» **J2 and J3 connectors** for fieldbus operation mode:

1. connect the wiring for the fieldbus, if used.
2. connect the appropriate input and ouput signals.

The basic diagram, in the following picture, shows the connection to be made to the connectors (indicated by its name and pin-out) of the drive with the motor and with an external controller for fieldbus comunication:

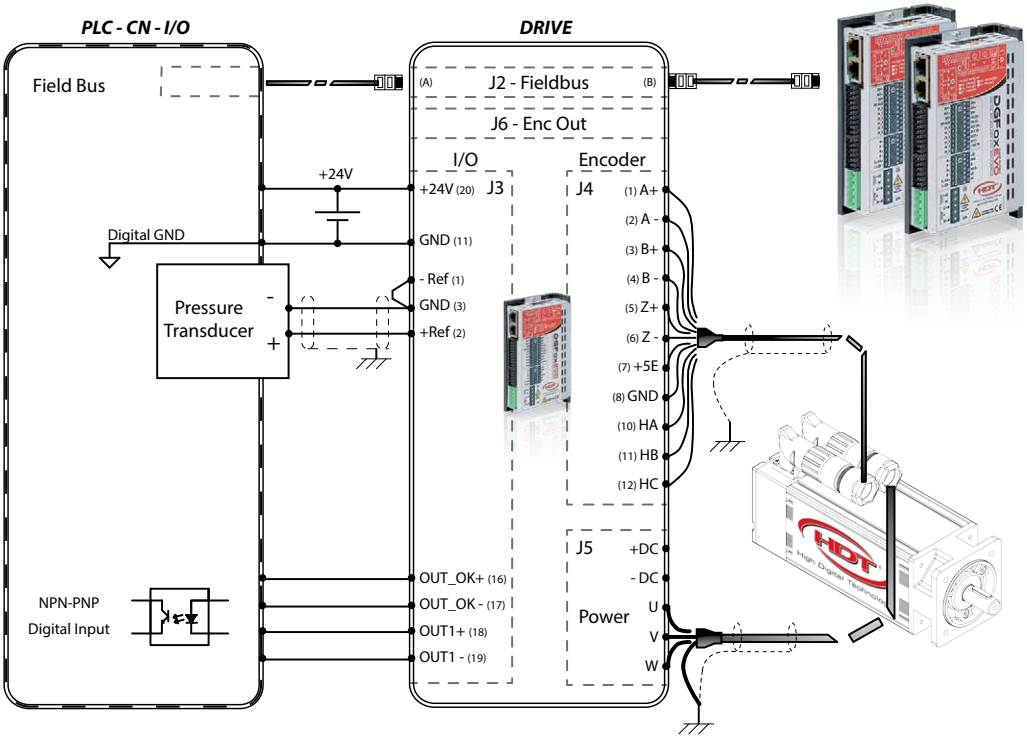

NOTES:

- The GND to pin 3 and 11 of connector J3 are connected inside the drive.
- To avoid noises of electromagnetic nature on the analog signals, please twist the cable and keep the signal cables far from power supply wiring of the motor as much as possible. Motor cable shields (both encoder and power cables) must be connected to related earth connection pins both drive and motor side.
- For further information about fieldbus parameters, please see related user guides, downloadable from enterprise web site:

www.hdtlovato.com

6.22 Closed loop regulation tuning

The tuning procedure is essential to obtain stability and performance of the entire controlled system; the drive, that performs the control, has PID controller both for the current loop that for the speed loop.

To perform tuning, please use Caliper software and observe some variables with Scope during operation (see *"6.13 Scope function" pag. 72*).

The following tuning procedure provides good results in most types of controlled systems, if following conditions are met:

- drive must be able to provide motor rated current.
- load inertia is 10 times grater than motor, maximum.

6.22.1 Current loop tuning

If drive controls an H.D.T. motor, the optimum PID current regulator setting is stored in a motor configuration file, in the directory to save data in PC used*.

To perform PID current tuning, *it is not essential that the load remains connected to the motor*.

If third parts motor is used, it's recommended to perform motor autophasing *both before and after the PID current tuning* (see *"6.07 Motor autophasing" pag. 61*). Please use an appropriate mechanical brake, in the case of vertical axis load (safety condition required during current loop tuning, due to automatic 90° motor phase autoshifting in order to avoid providing torque.

To perform tuning, please do the following:

1. **generate a square wave current reference**: use 'Wave Generator' function into Caliper software to create desired reference (see *"6.13 Scope function" pag. 72*). Provide to drive a reference with rated motor current amplitude and period set between 0.05seconds and 0.1seconds.

In this operation, drive provides the rated motor current, so the motor could reach high case temperature.

2. **PID current setting**: parameters to set are K_P e il K_I.
   - ***set K_I = 1***: integral action erased.
   - ***increase gradually K_P until current resonance appears:*** in this condition, an evident current resonance appears in Scope visualization (besides, this condition leads to a motor unusual noise).

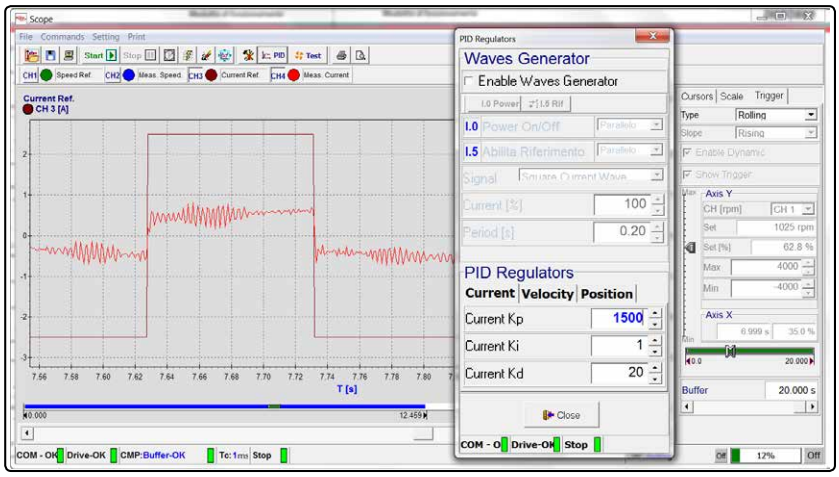

   - ***halve K_P value***: halving K_P, system avoids oscillation in transient conditions.
   - ***increase gradually K_I***: increase until misured current variable accurately follows the desired current reference. In any case, K_I parameter should not be greater than ***60% of K_P*** previously set.

*To get PID current configuration data related to H.D.T. motor, please contact our technical department.

An optimal current loop tuning is shown in picture below:

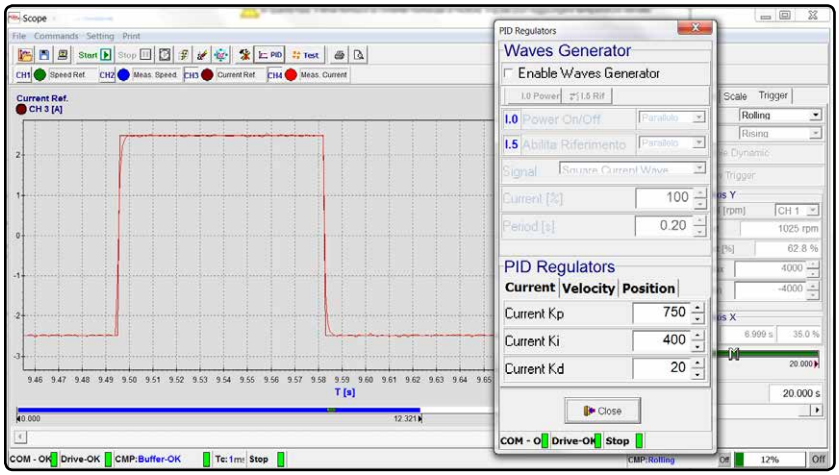

At the end of PID current tuning, if a third parts motor is used, please perform a 'Motor Autophasing' (see *"6.07 Motor autophasing" pag. 61*).

NOTES:

- K_P and K_I optimum values could vary greatly depending on application.
- In high inertia systems, resonance may not occur at any K_P values lower than maximum set value (2000). In these cases, set K_P equal to 1000 and increase K_I until misured current variable accurately follows the desired current reference: repeat entire operation erasing K_I and increasing K_P at step of 200.
- In any case, it's recommended to set $K_P \leq 1800$.

6.22.2 Speed loop tuning

Speed loop tuning must be performed with load connected because time constants depend on dinamic system to control.

Speed loop tuning must be performed after current loop tuning and execution step are similar.

If a third parts motor is used, it's recommended to perform motor autophasing *before speed loop tuning* (see *"6.07 Motor autophasing" pag. 61*).

To perform tuning, please do the following:

1. **generate appropriate cyclic target position**: use 'TEST' function into Caliper software to create desired reference (see *"6.13 Scope function" pag. 72*). Set target position with appropriate acceleration and deceleration parameters according to system dinamic, as shown in the image below:

   In these conditions, drive follows a speed and cyclic position reference with ramp parameters: please, pay attention to load during operation.

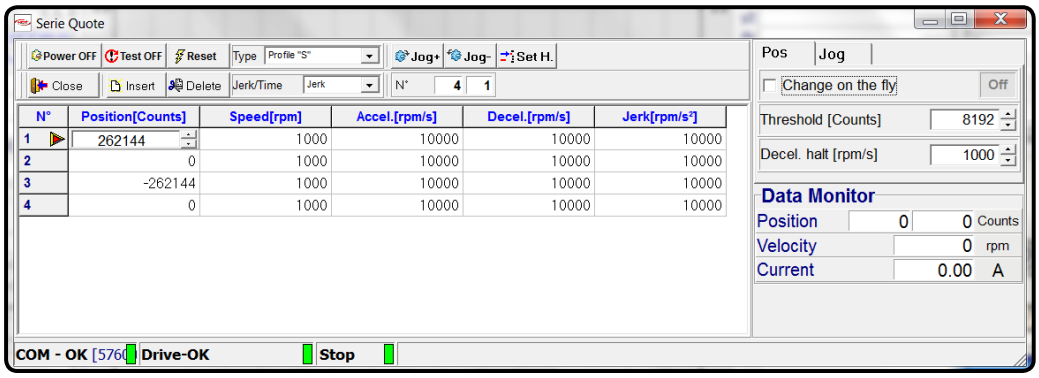

2. **PID speed setting**: parameters to set are K_p e il K_I.
   - ***set K_I = 0***: integral action erased.
   - ***increase gradually K_p until until speed resonance appears***: in this condition an evident speed error and resonance appear in Scope visualization (besides, this condition leads to a motor unusual noise).

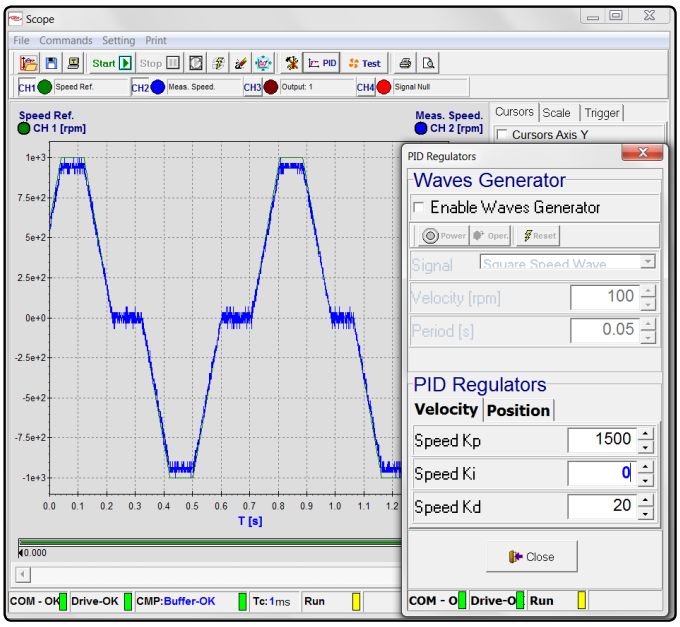

   - ***halve K_p* value**: halving K_p, system avoids oscillation in transient conditions..
   - ***increase gradually K_I***: increase until misured speed variable accurately follows the desired speed reference. In any case, K_I parameter should not be greater than ***40% of K_p*** previously set.

An optimal speed loop tuning is shown in picture below:

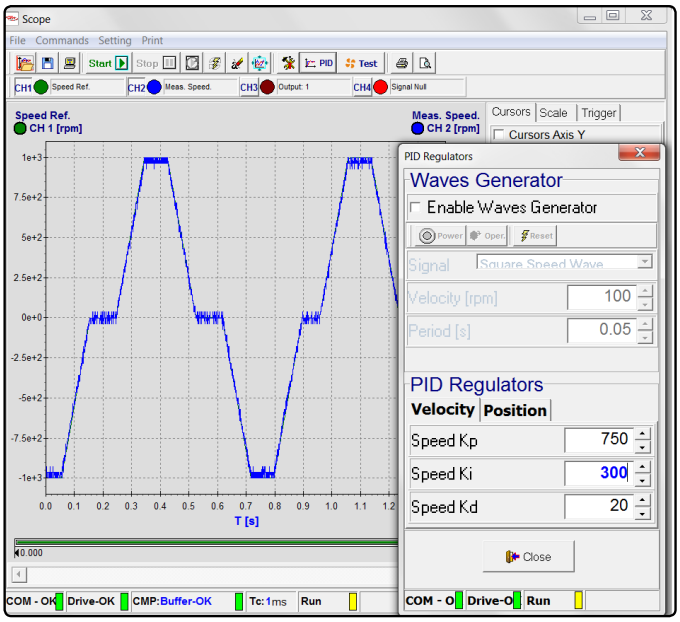

When observing the behavior of the load corresponding to the reference changes, please keep a waveform responce as possible without overshoot (low gain set), but also anche enough performance (high gain set). Therefore tuning is always the result of compromises between stability and performance.

Images below show tipical step of fisical closed loop system (current loop in the image at the low of graph and speed in the image above of graph).

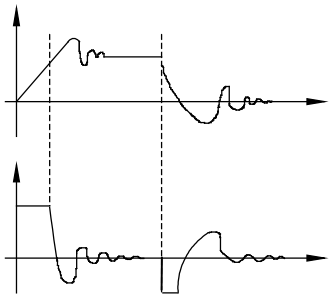

- *Step responce with low proporzional gain:* internal current reference, provided by speed regulator, is too slow andlead to overshoots around the constant condition reference, before get stability.

  Note that, in correspondence with current reference variation (origin of the axes), current loop responds correctly without overshoots; then the problem is caused by speed control gain.

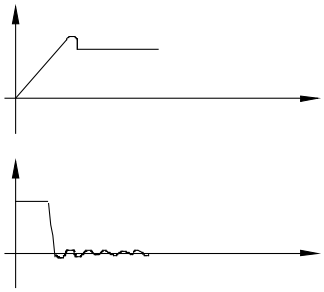

- *Step responce with acceptable proporzional gain*: current reference is fast enough and speed step responce shows anly one overshoot.

  In these cases, a too high integral gain, could leads to get more speed overshoots.

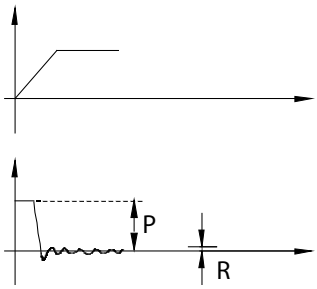

- *Step responce with optimum gain*:

  This condition leads to get performance and stability of system.

  It's recommended that noise amplitude *R* is lower than 15% of peak drive current value.

6.22.3 Position observer tuning

Observer function allows to filter motor position information in order to reduce application noise due to speed loop ruggedness, while maintaining sufficiently static and dinamic performances. This function is very usefull when motor provide a low resolution feedback (lower than 1000ppr) or with Hall sensor only applications.

Observer function is available with all supported feedback type (sensorless not supported).

Position observer tuning must be performed with load connected to motor and only after speed loop tuning is correctly done.

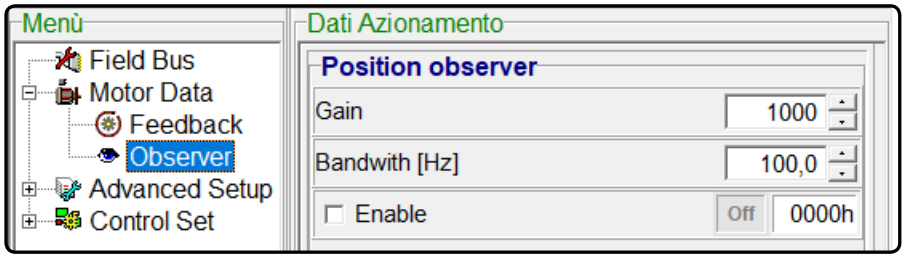

Usefull parameters are a Gain and a Bandwidth; the major filtering effect is due to bandwidth parameter, while observer responce is due to gain parameter, whose default value is correctly set for a lot of application.

For a correct and safety tuning, it's recommended to start with high bandwidth value, for example 300Hz where observer filtering is very low, then decrease this parameter gradually untill the application noise reduction desired is obtained.

⚠ Decreasing parameters excessively could lead to instability condition and to loss of motor controll, with consequently risk of damage equipment.

6.23 Sensorless loop tuning

The tuning procedure is necessary in order to obtain entire system ***stability***; drive uses the internal current and speed loop regulator and the sensorless loop regulator together.

To perform the procedure, Caliper software is necessary to observe some variables in Scope function during the drive operation (please see *"6.13 Scope function" pag. 72*).

The following tuning procedure provides good results in most types of controlled systems, if following conditions are met:

- drive must be able to provide motor rated current.
- load inertia is 6 times grater than motor, maximum.
- speed ramps must be enabled and lower than 5000RPM/s.

6.23.1 Setting speed/current loop and motor parameters

» Regarding motor data, it's necessary to enter these parameters into *Motor Data* menu:

- *Motor PHASE resistor value* in Ω. ATTENTION: If motor datasheet provides PHASE to PHASE resistor, please enter that halved parameter.
- *Motor PHASE Inductance* (*Synchrony*) in mH. ATTENTION: If motor datasheet provides PHASE to PHASE inductance, please enter that halved parameter.
- *Magnetic flux* (*Magnet Flow*) in Wb using the following formula:

$$MAG = \frac{Ke}{p} \cdot \frac{\sqrt{2}}{\sqrt{3}} \cdot 20 \quad [Wb]$$

In the previous formula, 'Ke' is motor e.m.f. parameter in Vs (Volt x second), 'P' is motor poles number.

Just in case 'Ke' would not be directly provided into datasheet, please use formula below to get the correct parameter by motor e.m.f. (FEM_{RPM}) given at a specified speed (RPM):

$$Ke = \frac{FEM_{RPM}}{RPM} \cdot \frac{60}{2\pi} \quad [V \cdot s]$$

Motor data must be set as shown in the picture below:

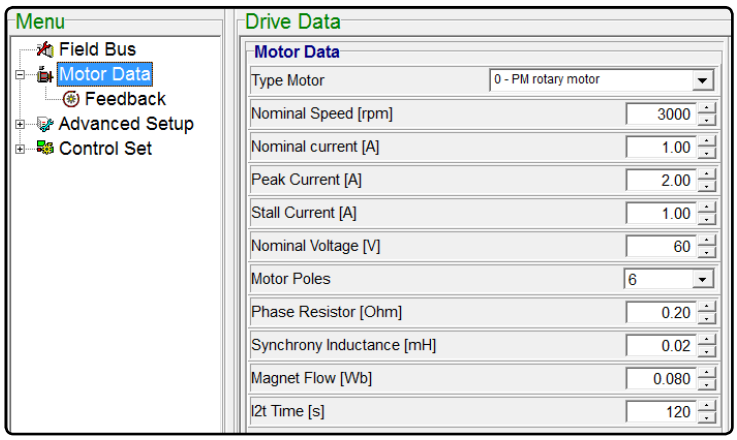

» Regarding speed and current loop regulators, as main parameters are related to sensorless predictive control, speed and current PID must be set as low as possible in order to avoid to let the system to instability conditions; it's recommended to set PID parameters (nel sottomenu *Advanced Setup*) as shown in the table below:

PID	***Speed***	***Current***
Kp	80	150
Ki	20	80
Kd	1	1

6.23.2 Setting sensorless parameters

The main window for sensorless setting parameters is shown in the image below, reporting default data:

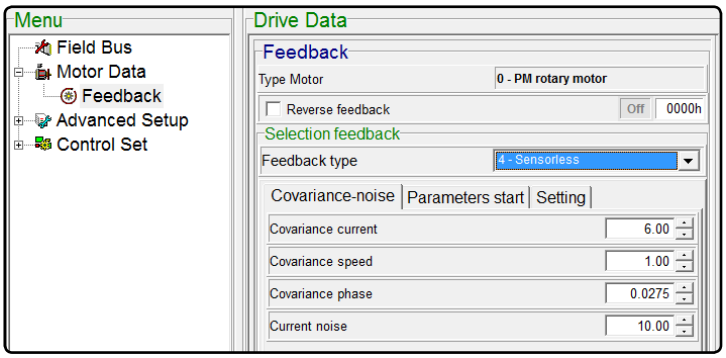

Covariance-noise window shows sensorless regulation parameters sensorless:

- *Covariance current*: sensorless regulation parameter; range between 0.01 and 650.00;
- *Covariance speed*: sensorless regulation parameter; range between 0.01 and 650.00;
- *Covariance phase*: sensorless regulation parameter; range between 0.0001 and 6.5000;
- *Current noise*: sensorless regulation parameter; range between 0.01 and 650.00;

Parameters start window allows to set:

- *Starting current:* current provided by drive to motor in order to guide the shaft to initial position; this parameter is percentage related to Nominal current parameter.
- *Current ramp*: ramp, in seconds, to reach starting current.
- *Initial speed*: speed parameter, in RPM, beyond which drive changes control algorithm, from V/F to sensorless.
- *Speed Hysteresis*: it's reffered to initial speed; this parameter is shown in RPM.
- *Speed ramp*: ramp, in RPM/s, to reach initial speed from zero speed.
- *Initial delay*: time parameter beyond which drive starts to follow speed reference; the delay is necessary to let the motor shaft to reach the corrrect start position.

Setting windows allow to set:

- *Zero crossing mode parameter*: it's available as *Continuous* or *Stop-Start*. Continuous mode allows to cross zero speed without the stop procedure, when a speed reference inversion occurs. Otherwise, Stop/Start mode let the drive to change into V/F control and perform the starting procedure in accordance with parameters shown into *Parameters start* window.
- *Stationing current*: when SWITCH-ON command is provided to drive, this parameter shows the 0 speed current that drive must provide to motor; this parameter is percentage related to Nominal current parameter.
- *Fault measured speed*: speed parameter, in RPM, beyond which drive provides alarm.

6.23.3 Sensorless loop tuning

ATTENTION:

- default data do not guarantee a correct sensorless tuning for any motors and must be used only for initial conditions of the tuning procedure.
- during procedure, drive could lose motor control engage and lead to an overrun rotation or to an unexpected shutdown. Please take safety relatated actions.

For sensorless tuning procedure, it's necessary to observe the following variables into Scope function of Caliper software:

- current reference
- measured current.
- speed reference.
- measured speed.

» *INITIAL PHASE: disconnect load and verify the correct motor phase connection.*

1. set an internal speed reference whose value must be positive and lower than default initial speed; so, for example, 50RPM.
2. enable the OPERATION ENABLE command neighter with digital input or with Caliper software.
3. ensure that motor rotate in clockwise viewing it from shaft; otherwise turn off the drive and invert two phases of motor, then re-execute 1-2-3 instruction points.

» *MIDDLE PHASE: tuning with no load.*

4. set an internal speed reference whose value must be a bit higher than default initial speed; so, for example, 500RPM. In this condition, motor could rotate in a discontinuous way or even NOT rotate.
5. enable the OPERATION ENABLE command and ensure that speed reference is actually brought to the desired value set into instruction point 4. Otherwise increase or decrease *Covariance current* parameter; it's recommended to increase or decrease with steps of 2-5 units. The initial sensorless setting example is shown below. In most cases:
   - for motor with a PHASE resistor lower than 0.8Ω and a PHASE inductance lower than 0.8mH, parameter should be increased. *When target is reached, please do not exceed beyond with the parameter setting.*
   - for motor with a PHASE resistor higher than 0.8Ω and a PHASE inductance higher than 0.8mH, parameter should be decreased. *When target is reached, please do not exceed beyond with the parameter setting.*

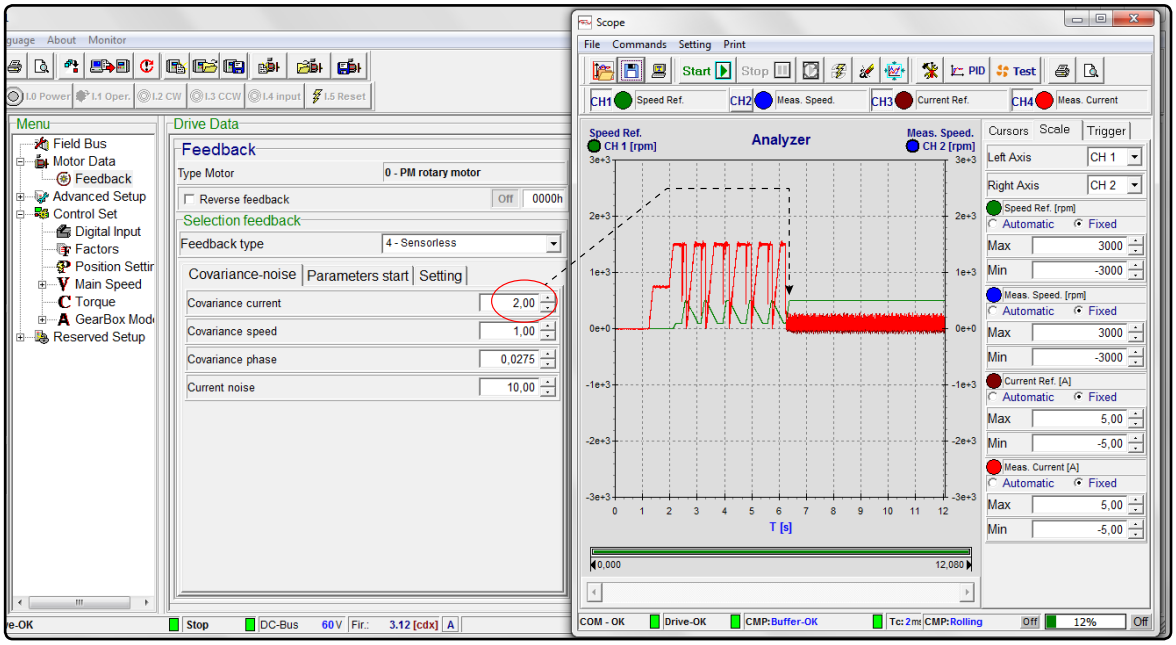

6. if, with procedure described into instruction point 5, it's not easy to stabilize correctly the speed reference to the desired value set into instruction point 4, then reset the *Covariance current* parameter at default value (6) and increase *Covariance phase* parameter; it's recommended to increase with steps of 0.01 units, untill the speed reference is correctly stabilized to the desired value set into instruction point 4. *When target is reached, please do not exceed beyond with the parameter setting.*
7. increase speed reference: for example 700-1000RPM.
8. to further reduce the measured speed noise and current reference noise, increase or decrease *Covariance current* parameter; it's recommended to increase or decrease with steps of 2-5 units. In most cases:
   - for motor with a PHASE resistor lower than 0.8Ω and a PHASE inductance lower than 0.8mH, parameter should be increased. *When target is reached, please do not exceed beyond with the parameter setting.*
   - for motor with a PHASE resistor higher than 0.8Ω and a PHASE inductance higher than 0.8mH, parameter should be decreased. *When target is reached, please do not exceed beyond with the parameter setting.*
9. if necessary, to reduce the measured current noise and consequently the measured speed noise, increase or decrease *Current noise* parameter; it's recommended to increase or decrease with steps of 2-5 units. In most cases:
   - for motor with a PHASE resistor lower than 0.8Ω and a PHASE inductance lower than 0.8mH, parameter should be increased. *When target is reached, please do not exceed beyond with the parameter setting.*
   - for motor with a PHASE resistor higher than 0.8Ω and a PHASE inductance higher than 0.8mH, parameter should be decreased. *When target is reached, please do not exceed beyond with the parameter setting.*
10. if necessary, it's possible to act further on *Covariance phase* parameter to reduce the no load current of the drive; however, in this way the measured speed noise increases. This solution could be usefull with low power/current motors.
11. now perform again all instruction points 8-9-10, increasing the speed reference with steps of 200-500RPM untill the desired application speed is reached. Note that the tuning performed at 500RPM could NOT be excellent for 2000RPM and vice versa. It's recommended to iterate the procedure with steps untill the desired speed is reached and then perform an excellent sensorless tuning. The picture below shows that setting is not excellent at 500RPM, but it's excellent for speed higher than 1000RPM.

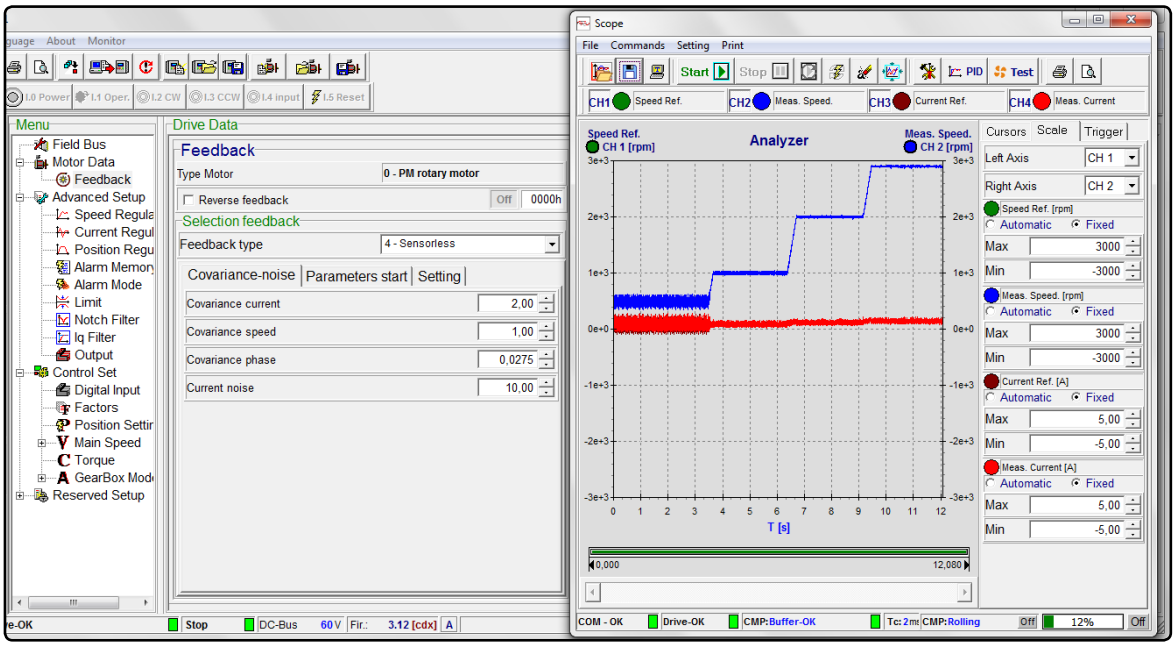

12. To further decrease the measured current noise and measured speed noise at 500RPM (see previous image), it's possible to decrease *Covariance current* parameter again: but this solution does NOT guarantee that tuning will be excellent at 2000RPM. For this reason, the tuning procedure requires an iteration with increasing steps for speed reference, in order to avoid abnormal behaviours that may occur if the speed reference changes from 500RPM to 3000RPM without an excellent tuning in the range.

13. *Covariance speed* parameter takes effect only for output frequency above 500Hz. In applications where these frequencies or above are necessary, usually speed noise or speed resonance may occurs; it's recommended to decrease *Covariance speed* parameter with step of 0.1 or 0.2 units untill the measured the speed is correctly stabilized to the desired value.
14. to increase performances during speed reference invertion, set zero crossing parameter to continuous value and perform an reference invertion. The speed sensorless control performs a commutation that may cause an abnormal rotation, during a zero crossing reference. Just in case the zero crossing may lead to drive alarms, with consequently loss of motor control, try to further decrease speed and current PID regulators (especially the integral action Ki) or set zero crossing parameter to stop/start value.

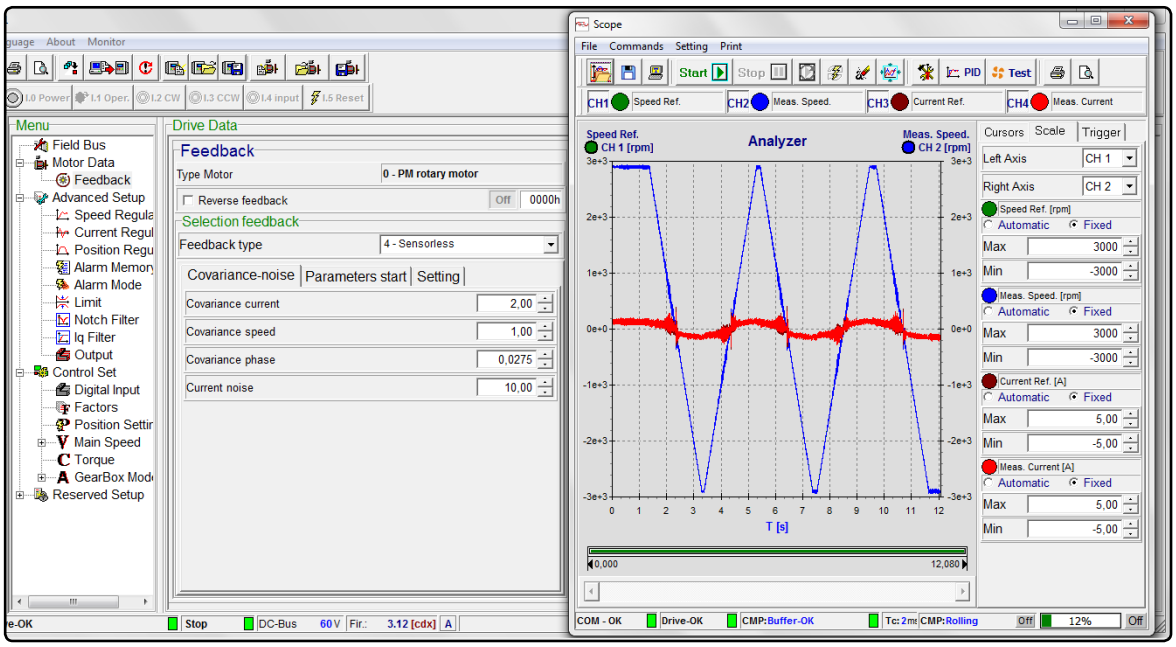

» *END PHASE: load connected*

15. it's possible to act further to all parameter described to get the excellent sensorles control tuning with load connected agire ulteriormente sui parametri precedentemente descritti per ottenere un tuning ottimale in condizione di carico. In most cases, the excellent parameters with load are not much different to parameters get with no load, if the following conditions are met:
    - drive must be able to provide motor rated current.
    - load inertia is 6 times grater than motor, maximum.
    - speed ramps must be enabled and lower than 5000RPM/s.

NOTES:

- factors are enabled: in order to ensure the correct function, it's recommended to perform an automatic calculation; si veda *"6.05 Factors" pag. 57*.
- the use of sensorless control with ramps higher than 5000RPM are allowed, but, during fast transient reference changes, instability may occure; this instability condition may not occure with slower dynamics.
- into the scope function, it's recommended to set fixed scale for all variables and, in order to observe the correct overlap of traces, it's further recommended that scale for reference and related measured variables are the same.
- it's recommended to keep visible on PC monitor both the main Caliper window and the Scope window appropriately scaled; in this way, it's easy to set sensorless parameters on Caliper main window observing effects on scope window.

Ch. 7 Drive status and diagnostics

7.01 LEDs signaling devices and drive status

Drive is equipped with 3 LEDs, whose combinations and operation modes allow to identify drive status and alarms/ warnings occured.

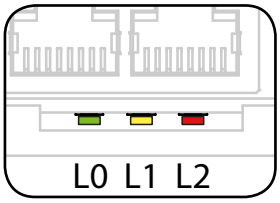

LEDs functions are descriped below:

- LED L0 (green): 'Drive OK' condition / alarms and warnings signaling code.
- LED L1 (yellow): 'SWITCH-ON' and 'OPERATION ENABLED' status / alarms and warnings signaling code.
- LED L2 (red): drive damaged alarms / alarms and warnings signaling code.

LEDs operation modes are described below:

- 2 intermittent status: one at **2Hz fast flashing** and another at **0.5Hz low flashing**.
- Fixed status **permanent turned-ON (1)** and **permanent turned-OFF (0)**.

Drive status and alarms/warnings operation modes are shown below:

DRIVE STATUS - ALARMS - WARNINGS	LED OK GREEN	LED L1 YELLOW	LED L2 RED
DRIVE OK + SWITCH-OFF	flashing 2Hz	0	0
DRIVE OK + SWITCH-OFF + F15 or F16	flashing 0.5Hz	0	0
DRIVE OK + SWITCH-ON	flashing 2Hz	flashing 2Hz	0
DRIVE OK + SWITCH-ON + F15 or F16	flashing 0.5Hz	flashing 2Hz	0
DRIVE OK + OPERATION ENABLED	flashing 2Hz	1	0
DRIVE OK + OPERATION ENABLED + F15 or F16	flashing 0.5Hz	1	0
WARNING: F17	flashing 0.5Hz	flashing 0.5Hz	0
FAULT: FA02 o FA21	0	0	1
FAULT: FA08	flashing 0.5Hz	flashing 0.5Hz	1
FAULT: FA22	0	flashing 0.5Hz	1
FAULT: FA25	flashing 0.5Hz	flashing 2Hz	1
FAULT: FA01	flashing 2Hz	flashing 2Hz	flashing 2Hz
FAULT: FA03	0	0	flashing 2Hz
FAULT: FA04	1	0	flashing 2Hz
FAULT: FA07	0	1	flashing 2Hz
FAULT: FA12	1	1	flashing 2Hz
FAULT: FA13	0	0	flashing 0.5Hz
FAULT: FA14	0	1	flashing 0.5Hz
FAULT: FA20	1	0	flashing 0.5Hz
FAULT: FA24	1	1	flashing 0.5Hz

DRIVE STATUS - ALARMS - WARNINGS	LED OK GREEN	LED L1 YELLOW	LED L2 RED
FAULT: FA26	flashing 0.5Hz	0	flashing 0.5Hz
FAULT: FA27	flashing 0.5Hz	flashing 0.5Hz	flashing 0.5Hz
FAULT: FA28	0	flashing 0.5Hz	flashing 0.5Hz
FAULT: FA30	1	flashing 0.5Hz	flashing 0.5Hz
FAULT: FA31	1	flashing 2Hz	flashing 2Hz

NOTES:

- To learn alarms/warnings meaning and possible solutions, please see table at *"7.03 Diagnostics" pag. 103*.
- LEDs signaling device shows only the first alarm/warning occured. Please use Caliper software to view a complete alarm/warning list.

7.02 Fieldbus status signaling

During Ethercat CoE and Profinet operation modes, other LEDs provide following bus status:

- LINK and ACTIVITY (Green and Yellow LEDs on each port of J2 connector) show status for ethernet comunication.
- state machine identification during Ethercat operation mode with green LED or Bus Failure identification during Profinet operation mode with red LED.

ETHERCAT	PROFINET
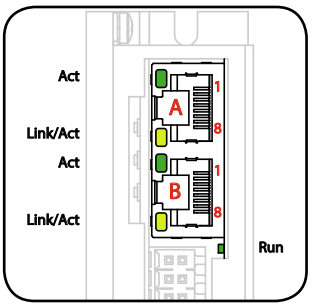	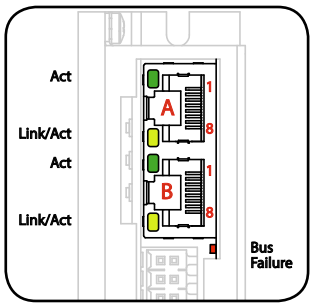

"RUN" (green)	*LED status*	"BUS FAILURE" (red)
Inizialisation	*Off*	*Active comunication link*
Pre-Operational	*flashing*	*Status OK / NO Comunication*
Safe-Operational	*single flash*	-
Operational	*On*	*No link available*

7.03 Diagnostics

Alarms/warnings can be reset by related command, depending on set operation mode (RESET digital input or RESET key in Caliper software or RESET command in fieldbus operation). If logic supply is turned off, alarms/warnings will be reset.

To learn the meaning for alarms/warning occured, please see drive status LEDs signaling (see *"7.01 LEDs signaling devices and drive status" pag. 101*); to learn error-code details, use Caliper software and see 'Advanced Setup - Alarm Memory' section.

When an alarm occures, drive immediatly can stop providing current to motor or can brake motor with a ramp deceleration; instead, in some warning situations, drive can hold motor control in a status different from *DRIVE OK* condition (this feature can be set via Caliper software).

Alarms /warnings codes, descriptions and solutions are shown below:

ERROR	ID	DESCRIPTION	SOLUTION	RESET	FAULT REACT.
EEPROM CORRUPTED DATA	FA01	An error occured while attempting to read EEPROM memory data. Drive stops providing current and 'Drive OK' condition is disabled.	This alarm code may result in EEPROM memory data loss. It requires a default data upload and then a new customer data upload, with riserved data too.	NO	NO
CURRENT SENSORS	FA02	An error occured while attempting to read signals from inverter current sensors. Drive stops providing current and 'Drive OK' condition is disabled.	At least, one of inverter current sensors has failed. Turn off, then turn on the drive; if problem persist, a repair from technical and designating person is required.	NO	NO
OVER CURRENT	FA03	Drive has detected an overcurrent condition in inverter current reading signals. Drive stops providing current and 'Drive OK' condition is disabled.	Please remove U,V,W cable from drive wirings and try OPERATION ENABLED status in this condition. If alarms still occures, a repair from technical and designating person is required. If alarm does not occure please ensure: • any short-circuits between motor phases or phase to Power Earth may occur. • that current loop gain coefficients are correctly set.	YES	NO
OVER VOLTAGE	FA04	Drive has detected an overvoltage condition in DC bus voltage reading signals. Drive stops providing current and 'Drive OK' condition is disabled.	Please ensure that power supply voltage is within expected range, see *"2.04 Technical data" pag. 11*. If alarm occures during braking operations, try to increase ramp time or to reconsider DC capacitor value (see *"4.04 Electrolitic capacitor" pag. 21*).	YES	NO
ENCODER	FA07	Encoder wiring cable is wrong or damaged. Drive stops providing current and 'Drive OK' condition is disabled.	Please verify encoder wiring cable (*"5.06 J4 connector: Feedback" pag. 28*) or check encoder and cable integrity. If wiring is OK, encoder may be damaged. Replace motor encoder.	YES	NO

ERROR	ID	DESCRIPTION	SOLUTION	RESET	FAULT REACT.
SPD	FA08	SPD safey circuit action (secire power disable): external contact, feeding voltage to SPD safety circuit, is opened. Drive stops providing current and 'Drive OK' condition is disabled.	Close external contact and reset all alarms If SPD safety circuit has failed, drive will provide alarm again after closing external contact. In this case, a repair from technical and designating person is required.	YES	NO
UNDER VOLTAGE	FA12	Drive has detected an undervoltage condition in DC bus voltage reading signals. Drive stops providing current and 'Drive OK' condition is disabled.	Solutions: • automatic restart, when DC voltage value will be within expected range. • restart with RESET signal.	YES	YES
POSITION FOLLOWING ERROR	FA13	In gearbox control or position control, difference between reference and feedback signals is out of chosen tollerance. Drive stops providing current and 'Drive OK' condition is disabled.	Recommended solutions: • increase following error threshold. • edit PID speed parameters. • decrease dynamics.	YES	YES
HOME POSITION	FA14	Drive has detected the Home Position lack. Drive stops providing current and 'Drive OK' condition is disabled.	Please perform an Home Position command, after drive operation mode was selected. See *"6.03 Caliper Menu" pag. 40*.	YES	NO
I2T DRIVE	F15	Theoretical drive temperature, due to provided current to load, exceeded maximum threshold. Drive continuous to operate normally, but maximum provided current is equal to drive rated current.	During initial start-up, please ensure a correct motor and drive wiring. Ensure that working cycle to be performed is not too much heavy for selected drive. Ensure that control loop parameters (speed) are not heavy. If application allows, decrease acceleration and deceleration ramp parameters.	YES	NO
I2T MOTOR	F16	Theoretical motor temperature, due to provided current from drive, exceeded maximum 100°C ΔT threshold. Drive continuous to operate normally, but maximum provided current is equal to motor rated current.	Ensure that working cycle to be performed is not too much heavy for used motor. Ensure that control loop parameters (speed) are not heavy. If application allows, decrease acceleration and deceleration ramp parameters. Ensure that 'I2T TIME' value, set in Motor Data section via Caliper, is correct for used motor.	YES	NO
OVER SPEED	F17	Maximum velocity value, set in Advanced Setup - Limiter section via Caliper, exceeded threshold. Drive continuous to operate normally.	Please ensure that 'Speed Limit' parameter is at least 10% upper than maximum reachable speed. Ensure that speed loop parameters do not generate high speed overshoot.	YES	NO

ERROR	ID	DESCRIPTION	SOLUTION	RESET	FAULT REACT.
FIELDBUS	FA20	Canopen® Node Guarding error occures or Time out error for Modbus or Profinet occures. Drive stops providing current and 'Drive OK' condition is disabled.	Restore fieldbus comunication. See *"Ch. 5 Wiring and connections" pag. 22*.	YES	YES
BROKEN EEPROM	FA21	EEPROM memory does not respond. Drive stops.	A repair from technical and designating person is required.	NO	NO
MOTOR PHASES	F22	During motor autophasing, drive has detected a wrong wiring connection. If SWITCH-ON command is able, motor could run without control.	Depending on used motor, recommended solutions are: • H.D.T. motor: ensure the correct wiring between drive and motor, then execute motor autophasing. See *"5.07 J5 connector: Power and motor supply" pag. 32* e *"6.07 Motor autophasing" pag. 61*. • Third party motor: invert 2 motor phases, then execute motor autophasing.	YES	NO
OVER TEMPERAT.	FA24	Heatsink temperature exceeded maximum threshold. Drive stops providing current and 'Drive OK' condition is disabled.	Recommended solutions: • wait some minutes before restarting drive. • ensure ambient temperature to be lower than 40°C.	YES	NO
HALL SENSORS SEQUENCE ERROR	FA25	Drive detected a wrong HALL sequence. Drive stops providing current and 'Drive OK' condition is disabled.	Recommended solutions: • connect correctly HALL sensors.	YES	NO
SPEED ERROR	FA26	In Canopen mode, in profile velocity mode, drive detected a speed error depending on velocity window and velocity window time parameters. Drive stops providing current and 'Drive OK' condition is disabled.	Recommended solutions: • increase velocity window and velocity window time parameters. • if application allows, decrease acceleration and deceleration ramp parameters. • ensure that there are not any barriers or obstacles during movement.	YES	NO
I2T DRIVE	FA27	Theoretical drive temperature, due to provided current to motor, exceeded maximum threshold and drive continued to provide current beyond set time. Drive stops providing current and 'Drive OK' condition is disabled.	During initial start-up, please ensure a correct motor and drive wiring. Ensure that there are no obstacles along the axis stroke.	YES	NO
I2T MOTOR	FA28	Theoretical motor temperature, due to provided current from drive, exceeded maximum 100°C ΔT threshold and drive continued to provide current beyond set time. Drive stops providing current and 'Drive OK' condition is disabled.	Ensure that working cycle to be performed is not too much heavy for used motor.	YES	NO

ERROR	ID	DESCRIPTION	SOLUTION	RESET	FAULT REACT.
OVER PRESSURE	FA30	Drive detected hydraulic over pressure condition from pressure transducer. Drive stops providing current and 'Drive OK' condition is disabled.	Ensure that transducer cable is whole and correct. Ensure also that transducer works properly. Check pressure parameter set into drive are correct. Ensure, via Caliper, that analog input reads correctly, otherwise a repair from technical and designating person is required.	YES	NO
UNDER PRESSURE	FA31	Drive detected hydraulic under pressure condition from pressure transducer. Drive stops providing current and 'Drive OK' condition is disabled.	Ensure that transducer cable is whole and correct. Ensure also that transducer works properly. Check pressure parameter set into drive are correct. Ensure, via Caliper, that analog input reads correctly, otherwise a repair from technical and designating person is required.	YES	NO

Ch. 8 Order code and accessories

Caliper 4 setup cable	CODE:	CNTPRG53
	**Description**	
	USB cable for drive setting and tuning via Caliper 4 software. Shielded, shield connected to both side of connector plugs. For any informations about connections, please see *"5.02 J1 connector: drive setting" pag. 23*.	
	Type:	USB A to micro B shielded for USB 2.0
	Poles:	5pin standard
	Total lenght:	3m

Termination resistors for Canopen and Modbus	CODE:	CNTETH00
	**Description**	
	Termination resistors connection for Canopen and Modbus network.	
	Type:	RJ45
	Termination value:	120Ω between CAN H to CAN L 120Ω between MODBUS + to MODBUS -
	Total lenght:	40mm

Multiple drives fieldbus wiring patch cable:	CODE:	CNTETH01
	**Description**	
	Multiple DGFox60 EVO drives wiring cable for cascade connection in fieldbus operation. Shielded FTP Cat. 5E EIA/TIA568B.	
	Type:	RJ45 / RJ45 Shielded FTP
	Poles:	8 pin-to-pin EIA/TIA568B
	Total lenght:	250mm

Full wave bridge rectifier module: CODE: KBPC2504

Description	
Full wave bridge rectifier module with isolated baseplate.	
Connection type:	Fast-on
Case size (mm):	28.8x28.8x10
I_D *@ 45°C without heatsink	3A
I_D @45° with metallic surface mount**:	10A
Breakdown Voltage:	400V
Fixing screw:	M5

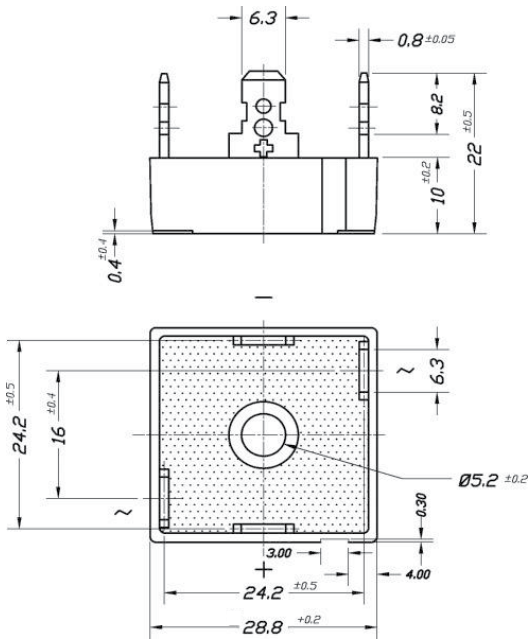

NOTES:* I_D means the single diode direct current capability.

*NOTES**:* In order to achive a correct power dissipation, metallic surface size must be **at least 250x250x1mm**.

Triphase bridge rectifier module: CODE: PSD3616

Description	
Triphase bridge rectifier module with isolated baseplate.	
Connection type:	Fast-on
Case size (mm):	28.5x28.5x9.5
I_O* @ 55°C case temperature	35
I_D FSM	400A
Breakdown Voltage:	1600V
Fixing screw:	M5

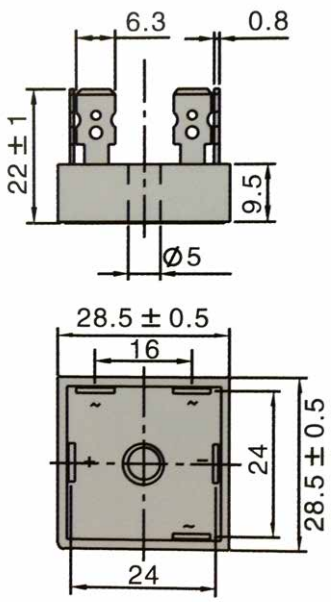

NOTES:* I_O means the total rectified current capability.

NOTES: In order to achive a correct power dissipation, metallic surface size must be **at least 250x250x1mm**.

Electrolitic capacitors: CODE: CE10000U100V

Description

Filter capacitor for external power supply.

Capacitor value:	10000µF
WV / SV:*	100V / 115V
Case size (mm):	051 x 105
Poles pitch:	22.2mm
Poles screw:	M5 x 9.5mm

RING CLIPS

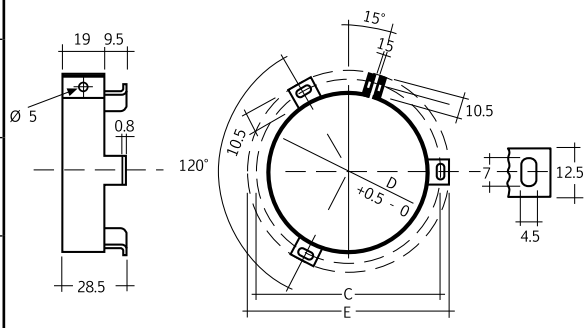

C:	63.5mm
D:	51mm
E:	73.4mm
Screw:	M4

NOTES:* **WV** = Working Voltage / **SV** = Surge Voltage

MS motors connector description for motore side and extension cable

MS motor output cable connector

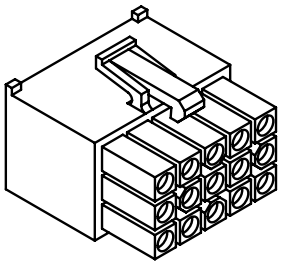

Housing: AMP 172171-1
Terminal: AMP 770835-1

MS motor extension cable connector

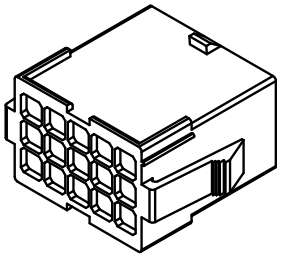

Housing: AMP 172163-1
Terminal: AMP 170361-1

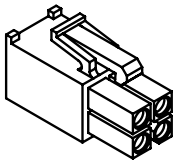

Housing: AMP 172167-1
Terminal: AMP 170360-1

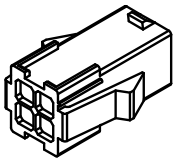

Housing: AMP 172159-1
Terminal: AMP 170362-1

Notes: for order codes, see MS motor catalog, available for downloading on enterprise website:

www.hdtlovato.com

CronaTech Drives AB

Post address:
Box 131
SE-475 11 Hälsö
Sweden

Visiting address:
Tärnvägen 9
SE-475 40 Hönö

Phone +46 31 961520
info@cronatech.se
www.cronatech.se

HDT

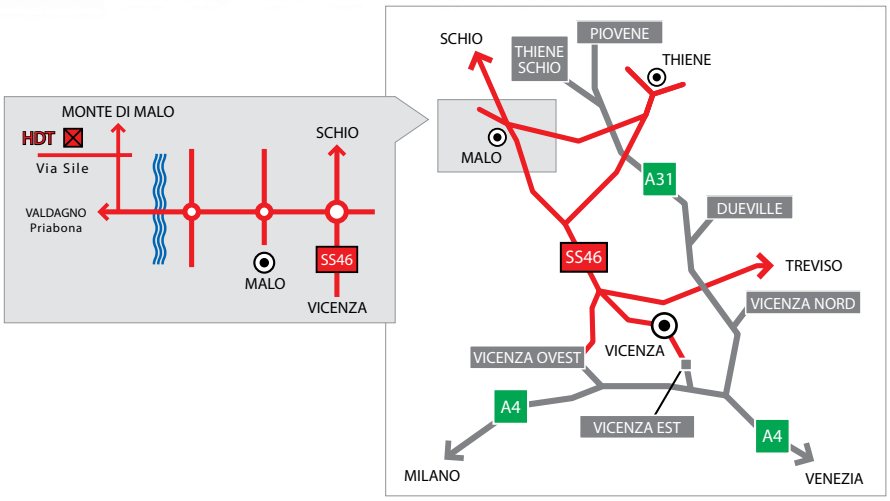

H.D.T. s.r.l.

www.hdtlovato.com

via Sile 8, 36030 Monte di Malo (VI)
Tel. +39. (0) 445.602744 r.a. – Fax +39. (0) 445.602668